Despieces

Calandra PS-80 292649B Rev01

NOTES TO USE PARTS LIST

Sheets no. 1, 2, 3, 4, 5, 6, 7 and 10:
Are common for all versions.

Sheet no. 8:
Relates to steam heated machines.

Sheet no. 9:
Relates to hot oil heated machines.

Sheets no. 11 & 12:
Relate to "M" (MICROPROCESSOR) machines.

Sheet no. 13:
Relates to "S" (STANDARD) machines.

ACLARACIONES PARA EL USO DEL DESPIECE

Las hojas nos. 1, 2, 3, 4, 5, 6, 7 y 10:
Son comunes a todas las variantes.

La hoja nº 8:
Corresponde a las máquinas con calefacción a vapor.

La hoja nº 9:
Corresponde a las máquinas con calefacción a aceite térmico.

Las hojas nº 11 y 12:
Corresponden a las máquinas "M" (MICROPROCESADOR)

La hoja nº 13:
Corresponde a las máquinas "S" (STANDARD)

NOTES UTILISATION VUES ECLATEES

Les feuilles nos. 1, 2, 3, 4, 5, 6, 7 et 10:
Sont communes à toutes les versions.

La feuille no. 8:
Correspond aux machines à chauffage à vapeur.

La feuille no. 9:
Correspond aux machines à chauffage à huile thermique.

Les feuilles no. 11 et 12:
Correspondent aux machines "M" (MICROPROCESSEUR)

La feuille no. 13:
Correspond aux machines "S" (STANDARD)

VERY IMPORTANT:
Before ordering parts be sure they have not been modified. Check it on modification sheet, after the corresponding sheet.

MUY IMPORTANTE:
Al pedir una pieza cerciorarse antes de que la misma no ha sido modificada. Si lo hubiese sido, estaria situada como hoja de modificaciones, detrás de la hoja correspondiente.

TRES IMPORTANT:
Avant de commander une pièce, s'assurer qu'elle n'a pas été modifiée. Le verifier sur feuille de modifications, derrière la feuille correspondante.

From A partir A partir	To Hasta Jusqu'à
745001	**.....**

PS - 80**

Cod nº 292649 B

Rev. nº 01/1106

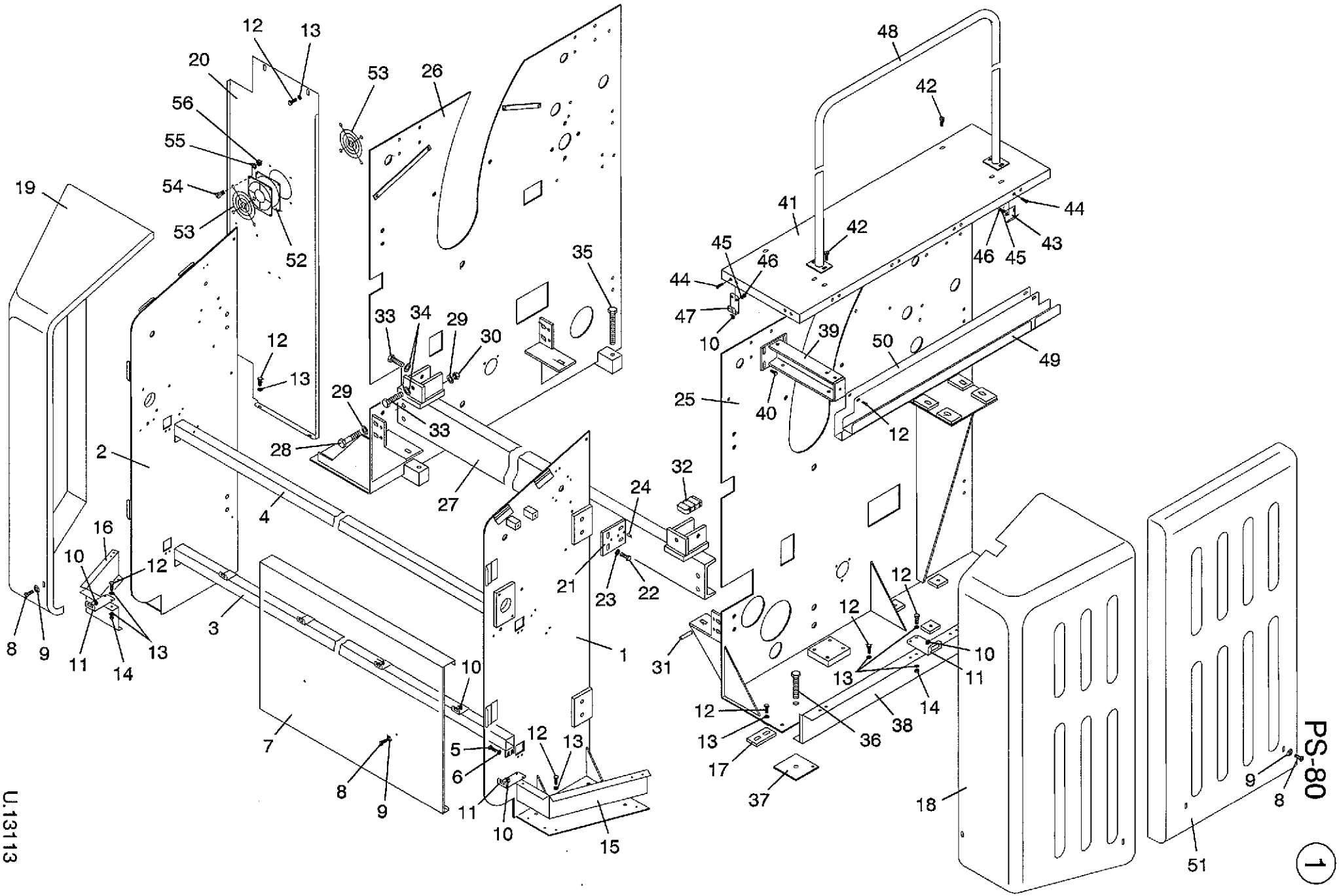
PS-80
1
U.13113

Nº	REF.	DENOMINATION	DENOMINACIÓN	DÉNOMINATION
1	286542	CLOTH INLET RIGTH SIDE	LATERAL DERECHO ENTRADA ROPA	LATERAL DROIT ENTREE LINGE
2	286476	CLOTH INLET LEFT SIDE	LATERAL IZQUIERDO ENTRADA ROPA	LATERAL GAUCHE ENTREE LINGE
3	284562	SIDE JOINTING HOSE (FOR PS-8030)	TUBO UNION LATERALES (PARA PS-8030)	TUBE UNION LATERAUX (POUR PS-8030)
	288464	SIDE JOINTING HOSE (FOR PS-8033)	TUBO UNION LATERALES (PARA PS-8033)	TUBE UNION LATERAUX (POUR PS-8033)
	288498	SIDE JOINTING HOSE (FOR PS-8035)	TUBO UNION LATERALES (PARA PS-8035)	TUBE UNION LATERAUX (POUR PS-8035)
4	284604	SIDE JOINTING HOSE (FOR PS-8030)	TUBO UNION LATERALES (PARA PS-8030)	TUBE UNION LATERAUX (POUR PS-8030)
	288514	SIDE JOINTING HOSE (FOR PS-8033)	TUBO UNION LATERALES (PARA PS-8033)	TUBE UINION LATERAUX (POUR PS-8033)
	288522	SIDE JOINTING HOSE (FOR PS-8035)	TUBO UNION LATERALES (PARA PS-8035)	TUBE UNION LATERAUX (POUR PS-8035)
5	146399	BICR HEX SCREW DIN933-8 M8X20	TOR.EX.DIN933-8.8 B.TRI.M 8X20	VIS HEX DIN933-8.8 BICR.M8X20
6	149518	BICR.WASHER B DIN125-ST 8,4	ARAN.B DIN125-ST B.TRI. 8,4	RONDELLE.B DIN125-ST BICR.8,4
7	284554	FRONT PANEL (FOR PS-8030)	TAPA FRONTAL (PARA PS-8030)	COUVERCLE FRONTAL (POUR PS-8030)
	288688	FRONT COVER (FOR PS-8033)	TAPA FRONTAL (PARA PS-8033)	COUVERCLE FRONTAL (POUR PS-8033)
	288696	FRONT COVER (FOR PS-8035)	TAPA FRONTAL (PARA PS-8035)	COUVERCLE FRONTAL (POUR PS-8035)
8	133033	INOX FLAT SCREW DIN85 M8X25 A2	TOR.PLA.DIN85 INOX A2-70 M8X25	VIS PLAT INOX DIN85 M8X25 A270
9	194498	LID WASHER	ARANDELA TAPAS	RONDELLE COUVERCLES
10	191924	CAGED NUT M8 1-1,7	TUER.ENJ.M8 1-1,7 R.310010-8	ECROU ENCAGE M8 1-1,7
11	285874	COVER FIXATION PIECE	ESCUADRA FIJACION TAPAS	PIECE FIXATION COUVERCLE
12	146233	BICR.HEX SCREW DIN933-8 M6X15	TOR.EX.DIN933-8.8 B.TRI.M 6X15	VIS HEX DIN933-8.8 BICR.M6X15
13	149526	BICR.WASHER B DIN125-ST 6,4	ARAN.B DIN125-ST B.TRI. 6,4	RONDELLE B DIN125-ST BICR.6,4
14	150227	BICR HEX NUT DIN934-8 M6	TUER.EX.DIN934-8 B.TRI.M 6	ECROU HEX DIN934-8 BICR.M6
15	286914	RIGHT FRONT TOE PLATE	ZOCALO FRONTAL DERECHO	SOCLE FRONTAL DROIT
16	286922	LEFT FRONT TOE PLATE	ZOCALO FRONTAL IZQUIERDO	SOCLE FRONT GAUCHE
17	289942	CLOTH INLET SIDE UNION	UNION LATERAL ENTRADA ROPA	UNION LATERAL ENTREE LINGE
18	304998	RIGHT FRONT PANEL	TAPA FRONTAL DERECHA	COUVERCLE FRONTAL DROITE
19	305003	LEFT FRONT PANEL	TAPA FRONTAL IZQUIERDA	COUVERCLE FRONTAL GAUCHE

Nº	REF.	DENOMINATION	DENOMINACIÓN	DÉNOMINATION
20	285957	BASE THERMIC SEPARATOR	SEPARADOR TERMICO BANCADAS	SEPARATEUR THERMIC BATIS
21	245423	MODULE JOINTING PIECE	PIEZA UNION MODULOS	PIECE UNION MODULES
22	177592	BI HEX SCREW DIN933-8.8 M14X25	TOR.EX.DIN933-8.8 B.TRI.M14X25	VIS HEX DIN933-8.8 M BIC.14X25
23	149393	BICR WASHER B DIN125-ST 15	ARAN.B DIN125-ST B.TRI.15	RONDELLE B BICR DIN125-ST 15
24	150896	FLEXIBLE PIN DIN1481 D6X20	PASADOR ELASTICO DIN1481 D6X20	GOUJON ELASTIQUE DIN1481 D6X20
25	285569	RIGHT SIDE	LATERAL DERECHO	LATERAL DROIT
26	285585	LEFT SIDE	LATERAL IZQUIERDO	LATERAL GAUCHE
27	220673	BED BRACKET (FOR PS-8030)	SOPORTE CAÑA (PARA PS-8030)	SUPPORT CUVETTE (POUR PS-8030)
	257709	BED BRACKET (FOR PS-8033)	SOPORTE CAÑA (PARA PS-8033)	SUPPORT CUVETTE (POUR PS-8033)
	264986	BED BRACKET (FOR PS-8035)	SOPORTE CAÑA (PARA PS-8035)	SUPPORT CUVETTE (POUR PS-8035)
28	147181	HEX SCREW 8G DIN933 M 16X45	TOR.EX.DIN933-8.8 B.TRI.M16X45	VIS HEX. 8G DIN933 M 16X45
29	149385	BICR.WASHER B DIN125-ST 17	ARAN.B DIN125-ST B.TRI.17	RONDELLE B DIN125-ST BICR.17
30	150276	BICR HEX.NUT DIN934-8 M-16	TUER.EX.DIN934-8 B.TRI.M16	ECROU HEX.DIN934-8 BICR M-16
31	134486	STEEL CYLINDRICAL BOLT 8X50	PASADOR CILINDRICO ACERO 8X50	GOUJON CYLINDRIQUE ACIER 8X50
32	207928	NEEDLE SLIDE	PATIN DE AGUJAS	PATIN D'AIGUILLES
33	146597	BI.HEX SCREW DIN933-8.8 M12X60	TOR.EX.DIN933-8.8 B.TRI.M12X60	VIS HEX DIN933-8.8 BIC.M12X 60
34	150235	BICR.HEX NUT DIN 934-8 M-12	TUER.EX.DIN934-8 B.TRI.M12	ECROU HEX DIN 934-8 BICR.M-12
35	246959	BASE REGULATION SCREW	TORNILLO REGULACION BASE	VIS REGULATION BASE
36	118158	BASE REGULATION SCREW	TORNILLO REGULACION BASE	VIS REGULATION BASE
37	118166	REGULATION SCREW SUPPORT	APOYO TORNILLO REGULACION	APPUI ECROU REGULATION
38	285817	SIDE TOE PLATE	ZOCALO LATERAL	SOCLE LATERAL
39	285692	COVER BRACKET	SOPORTE TAPAS	SUPPORT COUVERCLES
40	146399	BICR HEX SCREW DIN933-8 M8X20	TOR.EX.DIN933-8.8 B.TRI.M 8X20	VIS HEX DIN933-8.8 BICR.M8X20
41	285783	SIDE UPPER COVER	TAPA SUPERIOR LATERAL	COUVERCLE SUPERIEUR LATERAL
42	145367	INOX SCREW DIN85 M6X20 A2-70	TOR.PLA.DIN85 INOX A2-70 M6X20	VIS INOX DIN85 M6X20 A2-70
43	285882	PANEL FIXATION PIECE	PIEZA SUJECION TAPAS	PECE FIXATION COUVERCLES
44	147678	SCREW DIN963-4.8 BICR M 5X15	TOR.AV.DIN963-4.8 B.TRI.M 5X15	VIS AV DIN963-4.8 BICR M 5X15
45	149534	BICR.WASHER B DIN125-ST 5,3	ARAN.B DIN125-ST B.TRI. 5,3	RONDELLE B BICR.DIN125-ST 5,3

Nº	REF.	DENOMINATION	DENOMINACIÓN	DÉNOMINATION
46	150177	BICR HEX NUT DIN934-8 M5	TUER.EX.DIN934-8 B.TRI.M 5	ECROU HEX DIN934-8 BIC.M5
47	285940	WIRE-STOP BRACKET	SOPORTE PASA-CABLES	SUPPORT PASSECABLE
48	285999	PROTECCION	BARANDILLA	PROTECCION
49	285858	WIRE-STOP DUCT	CANAL PASACABLES	CANAL PASSECABLES
50	285866	WIRE-STOP DUCT (FOR PS-80 M)	CANAL PASACABLES (PARA PS-80 M)	CANAL PASSECABLES (POUR PS-80 M)
51	263095	SIDE COVER	TAPA LATERAL	COUVERCLE LATERAL
52	147884	FAN 120X120C38 220-240V	VENTILADOR 120X120X38 220-240	VENTILATEUR 120X120C38 220-240
53	183921	FAN PROTECTION	REJILLA VENTILADOR 99485902	PROTECTION VENTILATEUR
54	146092	BICR CYLD SCREW DIN84 M 4X 16	TOR.CIL.DIN84-4.8 B.TRI.M 4X16	VIS CYL BICR DIN84-4.8 M 4X 16
55	149476	BICR.WASHER B DIN125-ST 4,3	ARAN.B DIN125-ST B.TRI. 4,3	RONDELLE B DIN125-ST BICR.4,3
56	150185	BICR.HEX.NUT DIN934-8 M4	TUER.EX.DIN934-8 B.TRI.M 4	ECROU HEX.DIN934-8 BICR.M4

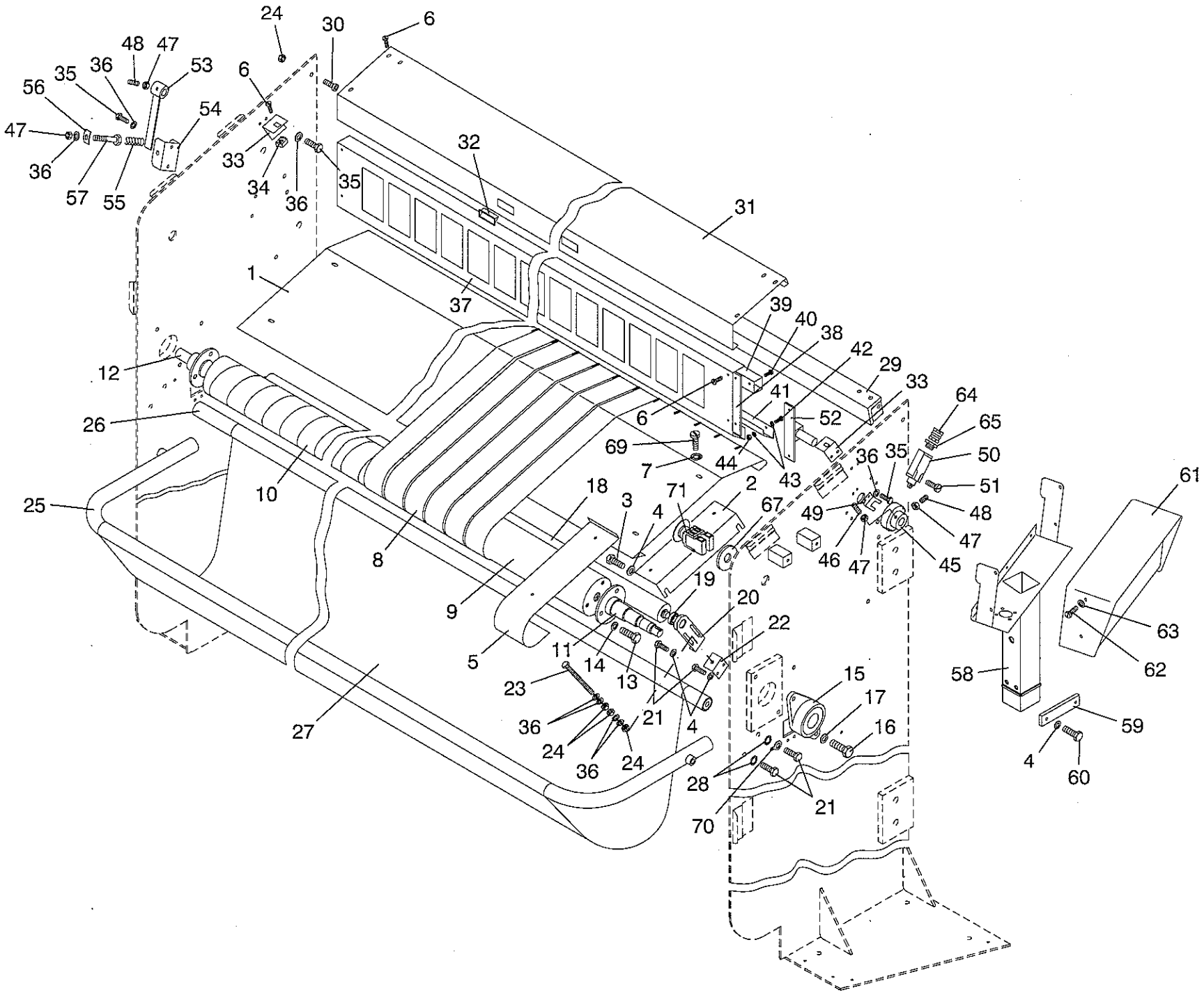

U.13114

PS-80 (2)

Nº	REF.	DENOMINATION	DENOMINACIÓN	DÉNOMINATION
1	286575	CLOTH INLET (FOR PS-8030)	ENTRADA ROPA (PARA PS-8030)	ENTREE LINGE (POUR PS-8030)
	288241	CLOTH INLET (FOR PS-8033)	ENTRADA ROPA (PARA PS-8033)	ENTREE LINGE (POUR PS-8033)
	288274	CLOTH INLET (FOR PS-8035)	ENTRADA ROPA (PARA PS-8035)	ENTREE LINGE (POUR PS-8035)
2	286971	CLOTH INLET BRACKET	SOPORTE ENTRADA ROPA	SUPPORT ENTREE LINGE
3	166652	BIC.HEX SCREW DIN933-8.8 M8X15	TOR.EX.DIN933-8.8 B.TRI.M 8X15	VIS HEX DIN933-8.8 BICR. M8X15
4	149518	BICR.WASHER B DIN125-ST 8,4	ARAN.B DIN125-ST B.TRI. 8,4	RONDELLE.B DIN125-ST BICR.8,4
5	286989	SIDE PROTECTION	PROTECCION LATERAL	PROTECTION LATERALE
6	145813	SCREW DIN85 INOX A2-70 M 6X12	TOR.PLA.DIN85 INOX A2-70 M6X12	VIS P.DIN85 INOX A2-70 M 6X12
7	149716	BICR.EXT TOOT.WASH.DIN6798 M6	ARAN.DEN.EXT.B.TRI.DIN6798M 6	RONDEL.DEN.EX.BICR DIN6798 M6
8	305011	CLOTH INLET BAND	BANDA ENTRADA ROPA	BANDE ENTREE LINGE
9	207977	CLOTH INLET ROLL (FOR PS-8030)	RODILLO ENTRADA ROPA (PARA PS-8030)	ROULEAU ENTREE LINGE (POUR PS-8030)
	258483	CLOTH INLET ROLL (FOR PS-8033)	RODILLO ENTRADA ROPA (PARA PS-8033)	ROULEAU ENTREE LINGE (POUR PS-8033)
	263939	CLOTH INLET ROLL (FOR PS-8035)	RODILLO ENTRADA ROPA (PARA PS-8035)	ROULEAU ENTREE LINGE (POUR PS-8035)
10	332866	ADHESIVE POLY RIBBON 50X1.8MM (1 METER)	CINTA POLY-SIL ADHESI.50X1.8MM (1 METRO)	SANGLE POLY-SIL ADHES.50X1.8MM (1 METRE)
	151993	ADHESIVE FABRIC 50X19 (1 COIL)	TEJIDO VISCOSILLA AUTOAD.50X19 (1 ROLLO)	TISSU ADHÉSIF 50X19 (1 ROULEAU)
11	221549	ROLL DRIVE SHAFT	EJE ARRASTRE RODILLO	AXE TRAINEMENT ROULEAU
12	245282	SUPPORT BOLT	BULON DE APOYO	BOULON APPUI
13	146480	BICR.HEX SCREW DIN933-8 M10X20	TOR.EX.DIN933-8.8 B.TRI.M10X20	VIS HEX BICR.DIN933-8 M 10X20
14	149500	BICR.WASHER B DIN125-ST 10,5	ARAN.B DIN125-ST B.TRI.10,5	RONDELLE B DIN125-ST BICR.10,5
15	177360	CLAMP BRACKET RE.SFT35	SOPORTE BRIDA RHP REF.SFT35	SUPPORT BRIDE REF.SFT35
16	147025	HEX SCREW 8G DIN 933 M-12X30	TOR.EX.DIN933-8.8 B.TRI.M12X30	VIS HEX. 8G DIN933 M-12X30
17	149419	BICR.WASHER B DIN125-ST 13	ARAN.B DIN125-ST B.TRI.13	RONDELLE B DIN125-ST BICR.13
18	284612	TIGHTENING ROLL (FOR PS-8030)	RODILLO TENSOR (PARA PS-8030)	ROULEAU TENDEUR (POUR PS-8030)
	288423	TIGHTENING ROLL (FOR PS-8033)	RODILLO TENSOR (PARA PS-8033)	ROULEAU TENDEUR (POUR PS-8033)
	288449	TIGHTENING ROLL	RODILLO TENSOR	ROULEAU TENDEUR

Nº	REF.	DENOMINATION	DENOMINACIÓN	DÉNOMINATION
		(FOR PS-8035)	(PARA PS-8035)	(POUR PS-8035)
19	142828	SPECIAL BEARING	RODAMIENTO ESPECIAL	ROULEMENT SPECIAL
20	284463	TIGHTENER ROLL BRACKET	SOPORTE RODILLO TENSOR	SUPPORT ROULEAU TENDEUR
21	146399	BICR HEX SCREW DIN933-8 M8X20	TOR.EX.DIN933-8.8 B.TRI.M 8X20	VIS HEX DIN933-8.8 BICR.M8X20
22	286997	ROLL TIGHTENER	TENSOR RODILLO	TENDEUR ROULEAU
23	146464	BICR.HEX SCREW DIN933-8 M8X100	TOR.EX.DIN933-8.8 B.TRI.M8X100	VIS HEX BICR.DIN933-8 M 8X100
24	150201	BICR.HEX NUT DIN 934-8 M-8	TUER.EX.DIN934-8 B.TRI.M 8	ECROU HEX.DIN 934-8 BICR.M-8
25	286724	TRAY BAR (FOR PS-8030)	BARRA BANDEJA (PARA PS-8030)	BARRE PLATEAU (POUR PS-8030)
	288589	TRAY BAR (FOR PS-8033)	BARRA BANDEJA (PARA PS-8033)	BARRE PLATEAU (POUR PS-8033)
	288605	TRAY BAR (FOR PS-8035)	BARRA BANDEJA (PARA PS-8035)	BARRE PLATEAU (POUR PS-8035)
26	286708	AWNING BRACKET HOSE (FOR PS-8030)	TUBO SOPORTE LONA (PARA PS-8030)	TUBE SUPPORT BACHE (POUR PS-8030)
	288548	AWNING BRACKET HOSE (FOR PS-8033)	TUBO SOPORTE LONA (PARA PS-8033)	TUBE SUPPORT BACHE (POUR PS-8033)
	288563	AWNING BACKET HOSE (FOR PS-8035)	TUBO SOPORTE LONA (PARA PS-8035)	TUBE SUPPORT BACHE (POUR PS-8035)
27	306886	TRAY AWNING (FOR PS-8030)	LONA BANDEJA (PARA PS-8030)	BACHE PLATEAU (POUR PS-8030)
	305763	TRAY AWNING (FOR PS-8033)	LONA BANDEJA (PARA PS-8033)	BACHE PLATEAU (POUR PS-8033)
	305771	TRAY AWNING (FOR PS-8035)	LONA BANDEJA (PARA PS-8035)	BACHE PLATEAU (POUR PS-8035)
28	149708	BICR.EXT.TOOT.WASH.DIN6798 M8	ARAN.DEN.EXT.B.TRI.DIN6798M 8	RONDEL.DEN.EX.BICR.DIN6798 M8
29	286773	UPPER COVER RENFORT (FOR PS-8030)	REFUERZO TAPA SUPERIOR (PARA PS-8030)	REFORT COUVERCLE SUPERIEUR (POUR PS-8030)
	288621	UPPER COVER RENFORT (FOR PS-8033)	REFUERZO TAPA SUPERIOR (PARA PS-8033)	REFORT COUVERCLE SUPERIEUR (POUR PS-8033)
	288647	UPPER COVER RENFORT (FOR PS-8035)	REFUERZO TAPA SUPERIOR (PARA PS-8035)	REFORT COUVERCLE SUPERIEUR (POUR PS-8035)
30	144402	ALLEN SCREW DIN 912 M-8X30	TOR.ALLDIN912-8.8 B.TRI.M 8X30	VIS ALLEN DIN 912 M-8X30
31	284349	FINGER PROTECTION UPPER COVER (FOR PS-8030) (RED PAINTED)	TAPA SUP.GUARDAMANOS 8030 ROJO (PARA PS-8030) (PINTADA ROJA)	COUVERCLE SUPERIEUR PROT-DOIGT (POUR PS-8030) (PEINTE ROUGE)

Nº	REF.	DENOMINATION	DENOMINACIÓN	DÉNOMINATION
	407379	FINGER PROTECTION UPPER COVER (FOR PS-8030) (GREY PAINTED)	TAPA SUP.GUARDAMANOS 8030 GRIS (PARA PS-8030) (PINTADA GRIS)	COUVERCLE SUPERIEUR PROT-DOIGT (POUR PS-8030) (PEINTE GRIS)
	407387	FINGER PROTECTION UPPER COVER (FOR PS-8033) (GREY PAINTED)	TAPA SUP.GUARDAMANOS 8033 GRIS (PARA PS-8033) (PINTADA GRIS)	COUVERCLE SUPERIEUR PROT-DOIGT (POUR PS-8033) (PEINTE GRIS)
	288704	FINGER PROTECTION UPPER COVER (FOR PS-8033) (RED PAINTED)	TAPA SUP.GUARDAMANOS 8033 ROJO (PARA PS-8033) (PINTADA ROJA)	COUVERCLE SUPERIEUR PROT-DOIGT (POUR PS-8033) (PEINTE ROUGE)
	407395	FINGER PROTECTION UPPER COVER (FOR PS-8035) (GREY PAINTED)	TAPA SUP.GUARDAMANOS 8035 GRIS (PARA PS-8035) (PINTADA GRIS)	COUVERCLE SUPERIEUR PROT-DOIGT (POUR PS-8035) (PEINTE GRIS)
	288712	FINGER PROTECTION UPPER COVER (FOR PS-8035) (RED PAINTED)	TAPA SUP.GUARDAMANOS 8035 ROJO (PARA PS-8035) (PINTADA ROJA)	COUVERCLE SUPERIEUR PROT-DOIGT (POUR PS-8035) (PEINTE ROUGE)
32	304923	KNOB P2-41	TIRADOR ENCASTRADO P2-41	POIGNEE P2-41
33	284356	UPPER COVER SUPPORT	APOYO TAPA SUPERIOR	APPUI COUVERCLE SUPERIEUR
34	165613	CAGED NUT M-6 2,6-3,5	TUER.ENJ.M6 2,6-3,5 R.310009-5	ECROU ENCAGE M-6 2,6-3,5
35	165621	BIC HEX SCREW DIN933-8,8 M6X10	TOR.EX.DIN933-8.8 B.TRI.M 6X10	VIS HEX DIN933-8,8 BICR M6X10
36	149526	BICR.WASHER B DIN125-ST 6,4	ARAN.B DIN125-ST B.TRI. 6,4	RONDELLE B DIN125-ST BICR.6,4
37	286633 *	FINGER PROTECTION PLATE (FOR PS-8030)	ENVOLVENTE GUARDAMANOS (PARA PS-8030)	PLAQUE PROTECTION-DOIGTS (POUR PS-8030)
	288332 $	FINGER PROTECTION PLATE (FOR PS-8033)	ENVOLVENTE GUARDAMANOS (PARA PS-8033)	PLAQUE PROTECTION-DOIGTS (POUR PS-8033)
	288381 &	FINGER PROTECTION PLATE (FOR PS-8035)	ENVOLVENTE GUARDAMANOS (PARA PS-8035)	PLAQUE PROTECTION-DOIGTS (POUR PS-8035)
38	306332	SPYHOLE 1500X220X5 (FOR PS-8030)	METACRILATO AHUMADO 1500X220X5 (PARA PS-8030)	FENTE DE VISEE 1500X220X5 (POUR PS-8030)
	306340	SPYHOLE 1650X220X5 (FOR PS-8033)	METACRILATO AHUMADO 1650X220X5 (PARA PS-8033)	FENTE DE VISEE 1650X220X5 (POUR PS-8033)
	306357	SPYHOLE 1750X220X5 (FOR PS-8035)	METACRILATO AHUMADO 1750X220X5 (PARA PS-8035)	FENTE DE VISEE 1750X220X5 (POUR PS-8035)
39	286666	SPYHOLE FIXING PROFILE (FOR PS-8030)	PERFIL FIJACION MIRILLA (PARA PS-8030)	PROFILE FIXATION FENTE VISEE (POUR PS-8030)
	288357	SPYHOLE FIXING PROFILE (FOR PS-8033)	PERFIL SUJECCION MIRILLA (PARA PS-8033)	PROFILE FIXATION FENTE VISEE (POUR PS-8033)
	288407	SPYHOLE FIXING PROFILE (FOR PS-8035)	PERFIL SUJECCION MIRILLA (PARA PS-8035)	PROFILE FIXATION FENTE VISEE (POUR PS-8035)
40	183400	CYL.PLATE SCREW ST-4 20 C/AL	TOR.CHAPA ST-4 20 C/AL.T25	VIS PLAQUE CYL.ST-4 20 C/AL

Nº	REF.	DENOMINATION	DENOMINACIÓN	DÉNOMINATION
41	286658	SPYHOLE FIXING PROFILE (FOR PS-8030)	PERFIL FIJACION MIRILLA (PARA PS-8030)	PROFILE FIXATION FENTE VISEE (POUR PS-8030)
	288340	SPYHOLE FIXING PROFILE (FOR PS-8033)	PERFIL FIJACION MIRILLA (PARA PS-8033)	PROFILE FIXATION FENTE VISEE (POUR PS-8033)
	288399	SPYHOLE FIXING PROFILE (FOR PS-8035)	PERFIL FIJACION MIRILLA (PARA PS-8035)	PROFILE FIXATION FENTE VISEE (POUR PS-8035)
42	146282	BICR.HEX SCREW DIN933-8 M 5X15	TOR.EX.DIN933-8.8 B.TRI.M 5X15	VIS HEX BICR.DIN933-8.8 M 5X15
43	149534	BICR.WASHER B DIN125-ST 5,3	ARAN.B DIN125-ST B.TRI. 5,3	RONDELLE B BICR.DIN125-ST 5,3
44	176826	SELF-BLOCKING NUT DIN 985 M-5	TUER.AUTOBL.DIN985-8 B.TRI.M5	ECROU AUTOBLOCANT DIN 985 M-5
45	286948	DRIVE PIECE	CUBO ACCIONADOR	ACTIONNEMENT
46	144147	ALLEN BUMP DIN913-10.9 M6X30	ESP.ALL.DIN913-10.9 M 6X30	GOUJON ALLEN DIN913-10.9 M6X30
47	150227	BICR HEX NUT DIN934-8 M6	TUER.EX.DIN934-8 B.TRI.M 6	ECROU HEX DIN934-8 BICR.M6
48	144089	ALLEN BUMP DIN913-10.9 M6X12	ESP.ALL.DIN913-10.9 M 6X12	GOUJON ALLEN DIN913-10.9 M6X12
49	287029	FINGER PROTECTION END.PIECE	TOPE GUARDAMANOS	ARRET PTOTECTION DOIGTS
50	305029	SWITCH	INT. POSICION XCK-P2102G11	INTERRUPTEUR
51	305037	BICR.CYL SCREW DIN84-4.8 M4X30	TOR.CIL.DIN84-4.8B.TRI.M 4X30	VIS CYL DIN84-4.8 BICR.M 4X 30
52	284364	FINGER PROTECTION SHAFT	MUÑON GUARDAMANOS	AXE PROTECTION DOIGTS
53	286674	END-PIECE LEVER	PALANCA TOPE	LEVIER ARRET
54	286963	FINGER PROTECT.SPRING BRACKET	SOPORTE MUELLES GUARDAMANOS	SUPPORT RESSORTS PROTEC.DOIGTS
55	196303	FINGER PROTECTION SPRING	MUELLE GUARDAMANOS	RESSORT PROTECTION DOIGTS
56	268987	FINGERS PROTECT.SPRING FIXING	SUJECCION MUELLE GUARDAMANOS	FIXATION RESSORT PROTECT.DOIGT
57	146233	BICR.HEX SCREW DIN933-8 M6X15	TOR.EX.DIN933-8.8 B.TRI.M 6X15	VIS HEX DIN933-8.8 BICR.M6X15
58	286740	CONTROL BOX	CAJA DE MANDOS	BOITE DE COMMANDES
59	287011	CONTROL BOX FIXING	FIJACION CAJA DE MANDOS	FIXATION BOITE COMMANDES
60	192849	BIC.HEX SCREW DIN933-8 M-8X25	TOR.EX.DIN933-8.8 B.TRI.M 8X25	VIS HEX.DIN933-8,8 BICR.M-8X25
61	271775	BOX COVER	TAPA CAJA	COUVERCLE BOITE
62	145664	INOX FLAT SCREW DIN85 M 4X8	TOR.PLA.DIN85 INOX A2-70 M4X 8	VIS PLAT INOX DIN85 M 4X8
63	149328	INOX A2 WASHER DIN 125 4,3	ARAN. DIN125 INOX A2 4,3	RONDELLE INOX A2 DIN 125 4,3
64	140095	STUFFING-BOX PG-9	PRENSAES.NORMADIX 600904 PG- 9	PRESSE-ETOUPES PG-9
65	140301	REDUCER PG 11-9	REDUCTOR 110904 PG 11-9	REDUCTEUR PG 11-9
66	192310	MUSHROOM PUSH-BUTTON	PUL.HONGO ENCL.3SB10 (341529)	PULSATEUR TYPE COUP DE POING

Nº	REF.	DENOMINATION	DENOMINACIÓN	DÉNOMINATION
67	192294	YELLOW RING	ARO AMARILLO	BAGUE JAUNE
68	197343	CONNECTION ELEMENT 3SB13 20-0A	ELEMENTO CONEXION 3SB13 20-0A	ELEMENT CONNEXION 3SB13 20-0A
69	145813	SCREW DIN85 INOX A2-70 M 6X12	TOR.PLA.DIN85 INOX A2-70 M6X12	VIS P.DIN85 INOX A2-70 M 6X12
70	280842	EARTH INTAKE	TOMA DE TIERRA	PRISE TERRE
*	286625	SET FINGER PROTECTION	GUARDAMANOS COMPLETO	PROTECTION-DOIGTS COMPLET
$	288324	SET FINGER PROTECTION	GUARDAMANOS COMPLETO	PROTECTION-DOIGTS COMPLET
&	288373	SET FINGER PROTECTION	GUARDAMANOS COMPLETO	PROTECTION-DOIGTS COMPLET

N°	REF.	DENOMINATION FROM MACHINE N° 745.057	DENOMINACIÓN A PARTIR DE LA MÁQUINA N° 745.057	DÉNOMINATION A PARTIR DE LA MACHINE N° 745.057
11	292482	ROLL DRIVE SHAFT	EJE ARRASTRE RODILLO	PALIER TRAINEMENT ROULEAU

N°	REF.	DENOMINATION FROM MACHINE N° 745.065	DENOMINACIÓN A PARTIR DE LA MÁQUINA N° 745.065	DÉNOMINATION A PARTIR DE LA MACHINE N° 745.065
2	293365	CLOTH INLET BRACKET	SOPORTE ENTRADA ROPA	SUPPORT ENTREE LINGE
7	149708	BICR.EXT.TOOT.WASH.DIN6798 M8	ARAN.DEN.EXT.B.TRI.DIN6798M 8	RONDEL.DEN.EX.BICR.DIN6798 M8
69	133033	INOX FLAT SCREW DIN85 M8X25 A2	TOR.PLA.DIN85 INOX A2-70 M8X25	VIS PLAT INOX DIN85 M8X25 A270

N°	REF.	DENOMINATION	DENOMINACIÓN	DÉNOMINATION
		FROM MACHINE N° 745.001	A PARTIR DE LA MÁQUINA N° 745.001	A PARTIR DE LA MACHINE N° 745.001
66	192310	CANCELLED	ANULADO	ANNULE
68	197343	CANCELLED	ANULADO	ANNULE
71	341529	EMERGENCY STOP LC	PARO EMERGENCIA LC	ARRET EMERGENCE LC

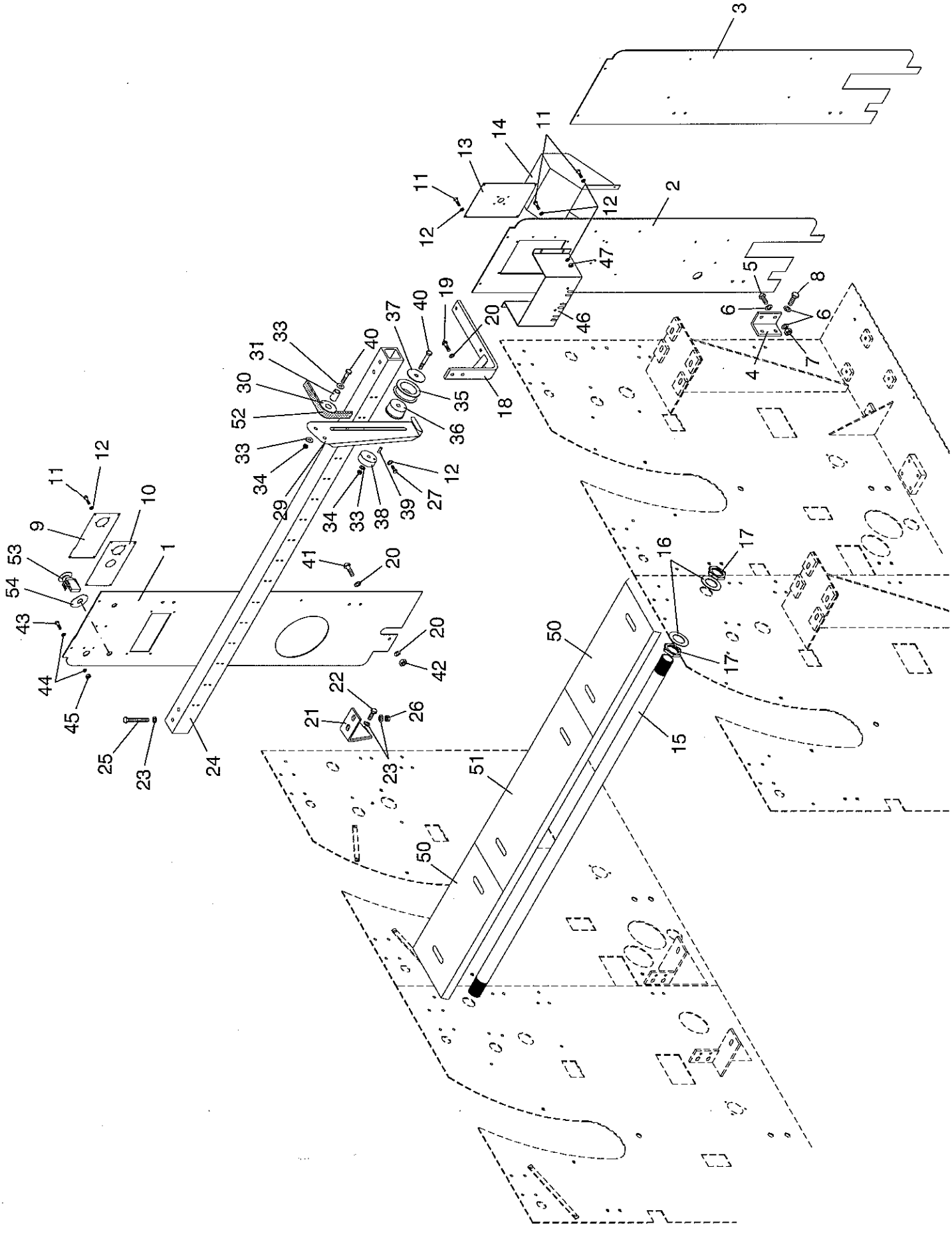
3
2
1
4
5
6
7
8
9
10
11
12
13
14
15
16
17
18
19
20
21
22
23
24
25
26
27
29
30
31
33
34
35
36
37
38
39
40
41
42
43
44
45
46
47
50
51
52
53
54

U.13115

Nº	REF.	DENOMINATION	DENOMINACIÓN	DÉNOMINATION
1	287201	LEFT END-PIECE PLATE	PLACA FINAL IZQUIERDA	PLAQUE FINAL GAUCHE
2	287185	RIGHT END-PIECE PLATE (FOR PS-80 M)	PLACA FINAL DERECHA (PARA PS-80 M)	PLAQUE FINAL DROITE (POUR PS-80 M)
3	287193	RIGHT END-PIECE PLATE (FOR PS-80/1 S)	PLACA FINAL DERECHA (PARA PS-80/1 S)	PLAQUE FINAL DROITE (POUR PS-80/1 S)
4	221689	END-PIECE PLATE FIXATION	FIJACION PLACA FINAL	FIXATION PLAQUE FINAL
5	186312	HEX SCREW 8G DIN933 M14X35	TOR.EX.DIN933-8.8 B.TRI.M14X35	VIS HEX 8G DIN933 M14X35
6	149393	BICR WASHER B DIN125-ST 15	ARAN.B DIN125-ST B.TRI.15	RONDELLE B BICR DIN125-ST 15
7	150250	BICR HEX.NUT DIN 934-8 M 14	TUER.EX.DIN934-8 B.TRI.M14	ECROU HEX.BICR DIN 934-8 M 14
8	177592	BI HEX SCREW DIN933-8.8 M14X25	TOR.EX.DIN933-8.8 B.TRI.M14X25	VIS HEX DIN933-8.8 M BIC.14X25
9	287243	MANOMETER PLATE (FOR PS-80/1 M)	PLACA MANOMETROS (PARA PS-80/1 M)	PLAQUE MANOMETRES (POUR PS-80/1 M)
10	287250	MANOMETER PLATE (FOR PS-80/2/3) (FOR PS-80/1 S)	PLACA MANOMETROS (PARA PS-80/2/3) (PARA PS-80/1 S)	PLAQUE MANOMETRES (POUR PS-80/2/3) (POUR PS-80/1 S)
11	146316	BICR.HEX SCREW DIN933-8 M-6X20	TOR.EX.DIN933-8.8 B.TRI.M 6X20	VIX HEX BICR.DIN933-8.8 M-6X20
12	149526	BICR.WASHER B DIN125-ST 6,4	ARAN.B DIN125-ST B.TRI. 6,4	RONDELLE B DIN125-ST BICR.6,4
13	287219	SECTION.COVER (FOR PS-80 M)	TAPA SECCIONADOR (PARA PS-80 M)	COUVERCLE SECTION (POUR PS-80 M)
14	288530	VARIATOR PROTECTION (FOR PS-80 M)	PROTECCION VARIADOR (PARA PS-80 M)	PROTECTION VARIATEUR (POUR PS-80 M)
15	222430	SIDE PANEL JOINTING (FOR PS-8030)	TUBO UNION LATERALES (PARA PS-8030)	UNION LATERAUX (POUR PS-8030)
	243477	SIDE PANEL JOINTING HOSE (FOR PS-8033)	TUBO UNION LATERALES (PARA PS-8033)	TUBE UNION LATERAUX (POUR PS-8033)
	243485	SIDE PANEL JOINTING HOSE (FOR PS-8035)	TUBO UNION LATERALES (PARA PS-8035)	TUBE UNION LATERAUX (POUR PS-8035)
16	246975	WASHER 65X48X1,5	ARANDELA 65X48X1,5	RONDELLE 65X48X1,5
17	120568	WATER INLET NUT	TUERCA ENTRADA AGUA	ECROU ENTREE EAU
18	290270	TRANSFORMER BRACKET (FOR 200,208,220 AND 240V) (FOR PS-80 M)	SOPORTE TRANSFORMADOR (PARA 200,208,220 Y 240V) (PARA PS-80 M)	SUPPORT TRANSFORMATEUR (POUR 200,208,220 ET 240V) (POUR PS-80 M)
19	147025	HEX SCREW 8G DIN 933 M-12X30	TOR.EX.DIN933-8.8 B.TRI.M12X30	VIS HEX. 8G DIN933 M-12X30
20	149419	BICR.WASHER B DIN125-ST 13	ARAN.B DIN125-ST B.TRI.13	RONDELLE B DIN125-ST BICR.13
21	286930	TIGHTENER BAR BRACKET	SOPORTE BARRA TENSORES	SUPPORT BARRE TENDEURS
22	146480	BICR.HEX SCREW DIN933-8 M10X20	TOR.EX.DIN933-8.8 B.TRI.M10X20	VIS HEX BICR.DIN933-8 M 10X20

Nº	REF.	DENOMINATION	DENOMINACIÓN	DÉNOMINATION
23	149500	BICR.WASHER B DIN125-ST 10,5	ARAN.B DIN125-ST B.TRI.10,5	RONDELLE B DIN125-ST BICR.10,5
24	286955	TIGHTENER BRACKET BAR (FOR PS-8030)	BARRA SOPORTE TENSORES (PARA PS-8030)	BARRE SUPPORT TENDEURS (POUR PS-8030)
	288662	TIGHTENER BRACKET BAR (FOR PS-8033)	BARRA SOPORTE TENSORES (PARA PS-8033)	BARRE SUPPORT TENDEURS (POUR PS-8033)
	288670	TIGHTENER BRACKET BAR (FOR PS-8035)	BARRA SOPORTE TENSORES (PARA PS-8035)	BARRE SUPPORT TENDEURS (POUR PS-8035)
25	146506	8G HEX.SCREW DIN 933 M-10X30	TOR.EX.DIN933-8.8 B.TRI.M10X30	VIS HEX. 8G DIN 933 M-10X30
26	150193	BICR HEX NUT DIN 934-8 M10	TUER.EX.DIN934-8 B.TRI.M10	ECROU HEX DIN 934-8 BICR.M10
27	146316	BICR.HEX SCREW DIN933-8 M-6X20	TOR.EX.DIN933-8.8 B.TRI.M 6X20	VIX HEX BICR.DIN933-8.8 M-6X20
28	150227	BICR HEX NUT DIN934-8 M6	TUER.EX.DIN934-8 B.TRI.M 6	ECROU HEX DIN934-8 BICR.M6
29	287359	TIGHTENER PULLEY BRACKET	SOPORTE POLEAS TENSORAS	SUPPORT POULIES TENDEUX
30	118893	TAPE TIGHTENER PULLEY	POLEA TENSOR CINTAS	POULIE TENDEUR RUBANS
31	284505	TIGTHENER PULLEY SLEEVE	CASQUILLO POLEAS TENSORAS	FRETTE POULIES TENDEUX
32	181867	HEX SCREW DIN933 M8X40	TOR.EX.DIN933-8.8 B.TRI.M 8X40	VIS HEX DIN933 M8X40
33	149518	BICR.WASHER B DIN125-ST 8,4	ARAN.B DIN125-ST B.TRI. 8,4	RONDELLE.B DIN125-ST BICR.8,4
34	164285	SELFBLOCKING NUT DIN985 M-8	TUER.AUTOBL.DIN985-8 B.TRI.M8	ECROU AUTOBLOCANT DIN985 M-8
35	290049	TIGHTENER PULLEY	POLEA TENSORA	POULIE TENDEUSE
36	290064	TIGTHENER PULLEY SLEEVE	CASQUILLO POLEA TENSORA	FRETTE POULIE TENDEUSE
37	290056	WASHER 50X8,5X3	ARANDELA 50X8,5X3	RONDELLE 50X8,5X3
38	290072	TIGHTENER COUNTERWEIGHT	CONTRAPESO TENSOR	CONTREPOIDS TENDEUR
39	150821	FLEXIBLE PIN DIN 1481 D5X10	PASADOR ELASTICO DIN1481 D5X10	GOUJON ELASTIQUE DIN1481 D5X10
40	193391	HEX SCREW 8G DIN933 M- 8X 70	TOR.EX.DIN933-8.8 B.TRI.M 8X70	VIS HEX.8G DIN933 M- 8X 70
41	147074	HEX SCREW 8G DIN 933 M12X40	TOR.EX.DIN933-8.8 B.TRI.M12X40	VIS HEX. 8G DIN 933 M12X40
42	150235	BICR.HEX NUT DIN 934-8 M-12	TUER.EX.DIN934-8 B.TRI.M12	ECROU HEX DIN 934-8 BICR.M-12
43	146290	BICR.HEX SCREW DIN933-8 M-5X20	TOR.EX.DIN933-8.8 B.TRI.M 5X20	VIS HEX BICR.DIN933-8.8 M-5X20
44	149534	BICR.WASHER B DIN125-ST 5,3	ARAN.B DIN125-ST B.TRI. 5,3	RONDELLE B BICR.DIN125-ST 5,3
45	150177	BICR HEX NUT DIN934-8 M5	TUER.EX.DIN934-8 B.TRI.M 5	ECROU HEX DIN934-8 BIC.M5
46	287136	FUSE HOLDER PLATE (FOR PS-80 M)	PLACA PORTA-FUSIBLES (PARA PS-80 M)	PLAQUE PORTE-FUSIBLE (POUR PS-80 M)
47	150227	BICR HEX NUT DIN934-8 M6	TUER.EX.DIN934-8 B.TRI.M 6	ECROU HEX DIN934-8 BICR.M6

Nº	REF.	DENOMINATION	DENOMINACIÓN	DÉNOMINATION
48	287169	TAPE GUIDE HOSE (FOR PS-8030)	TUBO GUIA CINTAS (PARA PS-8030)	TUBE GUIDE RUBANS (POUR PS-8030)
	288803	TAPE GUIDE HOSE (FOR PS-8033)	TUBO GUIA CINTAS (PARA PS-8033)	TUBE GUIDE RUBANS (POUR PS-8033)
	288829	TAPE GUIDE HOSE (FOR PS-8035)	TUBO GUIA CINTAS (PARA PS-8035)	TUBE GUIDE RUBANS (POUR PS-8035)
49	146506	8G HEX.SCREW DIN 933 M-10X30	TOR.EX.DIN933-8.8 B.TRI.M10X30	VIS HEX. 8G DIN 933 M-10X30
50	287060	JOINTING BED COVER	TAPA CAÑA DE UNION	COUVERCLE CUVETTE UNION
51	287094	JOINTING BED CENTRAL COVER (FOR PS-8030)	TAPA CENTRAL CAÑA DE UNION (PARA PS-8030)	COUVERCLE CENTRAL CUVETTE UN. (POUR PS-8030)
	288761	JOINTING BED CENTRAL COVER (FOR PS-8033)	TAPA CENTRAL CAÑA DE UNION (PARA PS-8033)	COUVERCLE CENTRAL CUVETTE UNI. (POUR PS-8033)
	288787	JOINTING BED CENTRAL COVER (FOR PS-8035)	TAPA CENTRAL CAÑA DE UNION (PARA PS-8035)	COUVERCLE CENTRAL CUVETTE UNI. (POUR PS-8035)
52	169409	POLYESTER TAPE 15MM (COIL)	ROLLO CINTA POLIP.15MM.BLANCA	RUBAN POLYESTER ROULEAU 15MM
	166496	POLYESTER TAPE NOMEX (COIL)	ROLLO CINTA NOMEX S/50 13MM.	RUBAN POLYESTER NOMEX(ROULEAU)
53	341230	PS EMERGENCY STOP	PARO EMERGENCIA PS	ARRET EMERGENCE PS
54	192294	YELLOW RING	ARO AMARILLO	BAGUE JAUNE

Nº	REF.	DENOMINATION	DENOMINACIÓN	DÉNOMINATION
		FROM MACHINE Nº 745.057	A PARTIR DE LA MÁQUINA Nº 745.057	A PARTIR DE LA MACHINE Nº 745.057
25	191858	HEX. SCREW 8G DIN931 M10X90	TOR.EX.DIN931-8.8 B.TRI.M10X90	VIS HEX. 8G DIN931 M10X90
27	146233	BICR.HEX SCREW DIN933-8 M6X15	TOR.EX.DIN933-8.8 B.TRI.M 6X15	VIS HEX DIN933-8.8 BICR.M6X15
28	150227	CANCELLED	ANULADO	ANNULE
48	287169	CANCELLED	ANULADO	ANNULE
	288803	CANCELLED	ANULADO	ANNULE
	288829	CANCELLED	ANULADO	ANNULE
49	146506	CANCELLED	ANULADO	ANNULE

N°	REF.	DENOMINATION FROM MACHINE N° 745.149	DENOMINACIÓN A PARTIR DE LA MÁQUINA N° 745.149	DÉNOMINATION A PARTIR DE LA MACHINE N° 745.149
2	409482	RIGHT END-PIECE PLATE (FOR PS-80 M)	PLACA FINAL DERECHA (PARA PS-80 M)	PLAQUE FINAL DROITE (POUR PS-80 M)
14	288530	CANCELLED	ANULADO	ANNULE

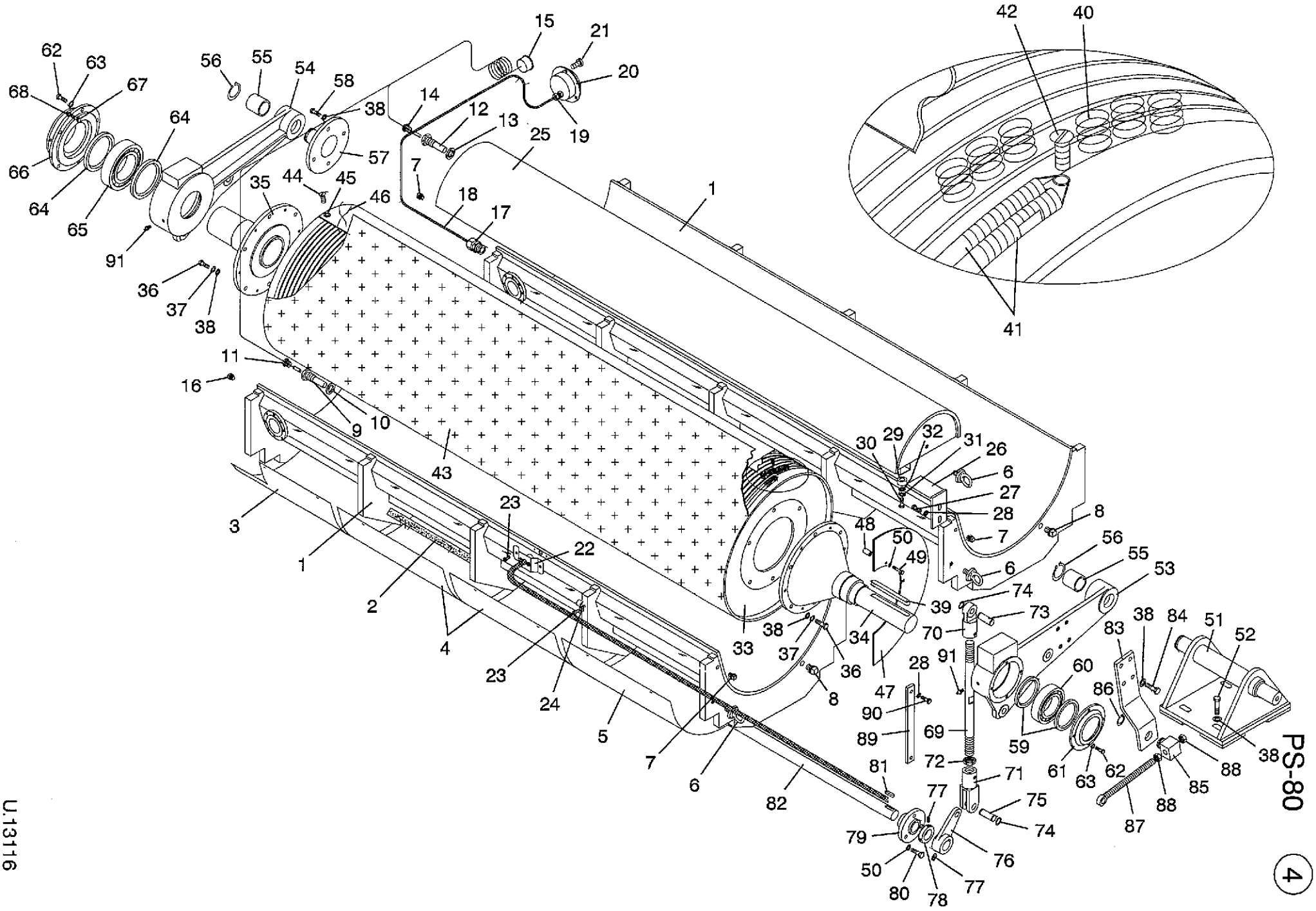
PS-80
4
U.13116

Nº	REF.	DENOMINATION	DENOMINACIÓN	DÉNOMINATION
1	285601	IRONER BED (FOR PS-8030)	CAÑA CALANDRA (PARA PS-8030)	CUVETTE CALANDRE (POUR PS-8030)
	288027	IRONER BED (FOR PS-8033)	CAÑA CALANDRA (PARA PS-8033)	CUVETTE CALANDRE (POUR PS-8033)
	287987	IRONER BED (FOR PS-8035)	CAÑA CALANDRA (PARA PS-8035)	CUVETTE CALANDRE (POUR PS-8035)
2	143180	GLASS WOOL 120X7 CM. (1 METER)	LANA DE VIDRIO 120X7 CM. (1 METRO)	LAINE DE VERRE 120X7 CM. (1 METRE)
3	245332	ISOLATING PROTECTION (FOR PS-8030)	ENVOLVENTE AISLANTE (PARA PS-8030)	PROTECTEUR ISOLANT (POUR PS-8030)
	258459	ISOLATING PROTECTION (FOR PS-8033)	ENVOLVENTE AISLANTE (PARA PS-8033)	PROTECTEUR ISOLANT (POUR PS-8033)
	264929	ISOLATING PROTECTION (FOR PS-8035)	ENVOLVENTE AISLANTE (PARA PS-8035)	PROTECTEUR ISOLANT (POUR PS-8035)
4	245357	ISOLATING PROTECTION (FOR PS-8030)	ENVOLVENTE AISLANTE (PARA PS-8030)	PROTECTEUR ISOLANT (POUR PS-8030)
	258475	ISOLATING PROTECTION (FOR PS-8033)	ENVOLVENTE AISLANTE (PARA PS-8033)	PROTECTEUR ISOLANT (POUR PS-8033)
	264945	ISOLATING PROTECTION (FOR PS-8035)	ENVOLVENTE AISLANTE (PARA PS-8035)	PROTECTEUR ISOLANT (POUR PS-8035)
5	245340	ISOLATING PROTECTION (FOR PS-8030)	ENVOLVENTE AISLANTE (PARA PS-8030)	PROTECTEUR ISOLANT (POUR PS-8030)
	258467	ISOLATING PROTECTION (FOR PS-8033)	ENVOLVENTE AISLANTE (PARA PS-8033)	PROTECTEUR ISOLANT (POUR PS-8033)
	264937	ISOLATING PROTECTION (FOR PS-8035)	ENVOLVENTE AISLANTE (PARA PS-8035)	PROTECTEUR ISOLANT (POUR PS-8035)
6	132936	HOOK M-20 MALE	CANCAMO M-20 MACHO	OIL MANUTENTION M-20 MALE
7	122291	FIG. 290 1/4" GALV.	FIGURA 290 DE 1/4" GALV.	FIG. 290 1/4" GALV.
8	129825	ELBOW FIG. 290 1/2" GALV.	FIGURA 290 DE 1/2" GALV.	COUDE FIG. 290 1/2" GALV.
9	287045	UNION BED SHEATH (FOR PS-80/1 S)	VAINA CAÑA DE UNION (PARA PS-80/1 S)	FOURREAU CUVETTE UNION (POUR PS-80/1 S)
10	109777	COPPER GASKET 1/2" (FOR PS-80/1 S)	12504 JUNTA COBRE 1/2" (PARA PS-80/1 S)	JOINT CUIVRE 1,2" (POUR PS-80/1 S)
11	287052	BED PROBE FIXING (FOR PS-80/1 S)	FIJACION SONDA CAÑA (PARA PS-80/1 S)	FIXATION SONDE CUVETTE (POUR PS-80/1 S)
12	287045	UNION BED SHEATH (FOR PS-80/2/3)	VAINA CAÑA DE UNION (PARA PS-80/2/3)	FOURREAU CUVETTE UNION (POUR PS-80/2/3)
13	109777	COPPER GASKET 1/2" (FOR PS-80/2/3)	12504 JUNTA COBRE 1/2" (PARA PS-80/2/3)	JOINT CUIVRE 1,2" (POUR PS-80/2/3)

Nº	REF.	DENOMINATION	DENOMINACIÓN	DÉNOMINATION
14	287052	BED PROBE FIXING (FOR PS-80/2/3)	FIJACION SONDA CAÑA (PARA PS-80/2/3)	FIXATION SONDE CUVETTE (POUR PS-80/2/3)
15	305284	THERMOMETER 0-200 C D52 CAP.3M (FOR PS-80/2/3) (FOR PS-80/1 S)	TERMOMETRO 0-200 C D52 CAP.3M (PARA PS-80/2/3) (PARA PS-80/1 S)	THERMOMETRE 0-200 C D52 CAP.3M (POUR PS-80/2/3) (POUR PS-80/1 S)
16	122291	FIG. 290 1/4" GALV. (FOR PS-80/2/3)	FIGURA 290 DE 1/4" GALV. (PARA PS-80/2/3)	FIG. 290 1/4" GALV. (POUR PS-80/2/3)
17	178558	SIMPLE JOINTING 1/4"RE.1050613	CONEXION RECTA 1/4" 181250628	UNION SIMPLE 1/4" REF.1050613
18	128157	COPPER HOSE D6X4 (1 METER)	TUBO COBRE RECOCIDO D6X4 (1 METRO)	TUBE CUIVRE D6X4 (1 METRE)
19	178541	SIMPLE JOINTING 1/4"RE.1140613	UNION SIMPLE 1/4" REF.1140613	UNION SIMPLE 1/4" REF.1140613
20	178491	WIKA MANOMETER 0-16 KG/CM2 (FOR MACHINES STEAM HEATING)	MANOMETRO WIKA 0-16 KG/CM2 (PARA MODELOS CALEF. VAPOR)	MANOMETRE WIKA 0-16 KG/CM2 (POUR MACHINES CHAUF.VAPEUR)
	181149	WIKA MANOMETER 0-6 KG/CM2 (FOR MACHINES OIL HEATING)	MANOMETRO WIKA 0-6 KG/CM2 (PARA MOD.CAL.ACEITE TERMICO)	MANOMETRE WIKA 0-6 KG/CM2 (POUR MACH.CHAUF.HUILE TER.)
21	155218	INOX FLAT SCREW DIN85 M3X10 A2	TOR.PLA.DIN85 INOX A2-70 M3X10	VIS PLAT INOX DIN85 M3X10 A270
22	285890	THERMOSTAT.PROBE (FOR PS-80 M)	SONDA TERMOSTATICA (PARA PS-80 M)	SONDE THERMOSTAT. (POUR PS-80 M)
23	149393	BICR WASHER B DIN125-ST 15	ARAN.B DIN125-ST B.TRI.15	RONDELLE B BICR DIN125-ST 15
24	198507	FIXING CLAMP 1X 8 DIN 72571 (FOR PS-80 M)	ABRAZ.FIJACION 1X 8 DIN 72571 (PARA PS-80 M)	BRIDE FIXATION 1X 8 DIN 72571 (POUR PS-80 M)
25	230847	JOINTING BED (FOR PS-8030) (FOR PS-80/2/3)	CAÑA DE UNION (PARA PS-8030) (PARA PS-80/2/3)	CUVETTE UNION (POUR PS-8030) (POUR PS-80/2/3)
	257527	JOINTING BED (FOR PS-8033) (FOR PS-80/2/3)	CAÑA DE UNION (PARA PS-8033) (PARA PS-80/2/3)	CUVETTE UNION (POUR PS-8033) (POUR PS-80/2/3)
	263590	JOINTING BED (FOR PS-8035) (FOR PS-80/2/3)	CAÑA DE UNION (PARA PS-8035) (PARA PS-80/2/3)	CUVETTE UNION (POUR PS-8035) (POUR PS-80/2/3)
26	246538	JOINTING BED SUPPORT (FOR PS-80/2/3)	APOYO CAÑA DE UNION (PARA PS-80/2/3)	APPUI CUVETTE UNION (POUR PS-80/2/3)
27	146712	BI HEX SCREW DIN933-8.8 M14X30	TOR.EX.DIN933-8.8 B.TRI.M14X30	VIS HEX DIN933-8.8 BICR.M14X30
28	149393	BICR WASHER B DIN125-ST 15	ARAN.B DIN125-ST B.TRI.15	RONDELLE B BICR DIN125-ST 15
29	118836	BED ISOLATING SUPPLEMENT	SUPLEMENTO UNION CAÑA	SUPPLEMENT UNION CUVETTE
30	146993	BIC.HEX SCREW DIN931-8 M20X100	TOR.EX.DIN931-88 B.TRI.M20X100	VIS HEX DIN931-8 BICR.M20X100
31	149641	BICR.EXT.TOOT.WASH.DIN6798 M20	ARAN.DEN.EXT.B.TRI.DIN6798M20	RONDEL.DEN.EX.BICR.DIN6798 M20
32	149427	BICR WASHER B DIN125-ST 21	ARAN.B DIN125-ST B.TRI.21	RONDELLE B BICR.DIN125-ST 21

Nº	REF.	DENOMINATION	DENOMINACIÓN	DÉNOMINATION
33	220434	IRONER ROLL (FOR PS-8030)	CILINDRO CALANDRA (PARA PS-8030)	ROULEAU CALANDRE (POUR PS-8030)
	257550	IRONER ROLL (FOR PS-8033)	CILINDRO CALANDRA (PARA PS-8033)	ROULEAU CALANDRE (POUR PS-8033)
	264978	IRONER ROLL (FOR PS-8035)	CILINDRO CALANDRA (PARA PS-8035)	ROULEAU CALANDRE (POUR PS-8035)
34	220442	ROLL RIGHT SHAFT	MUÑON DERECHO CILINDRO	AXE DROIT ROULEAU
35	220566	ROLL LEFT SHAFT	MUÑON IZQUIERDO CILINDRO	AXE GAUCHE ROULEAU
36	147181	HEX SCREW 8G DIN933 M 16X45	TOR.EX.DIN933-8.8 B.TRI.M16X45	VIS HEX. 8G DIN933 M 16X45
37	149849	GROWER WASHER DIN127 M16	ARAN.GROWER A16 DIN127 PAVON.	RONDELLE GROWER DIN127 M16
38	149385	BICR.WASHER B DIN125-ST 17	ARAN.B DIN125-ST B.TRI.17	RONDELLE B DIN125-ST BICR.17
39	177410	PIN DIN6885-A 200X20X12	CHAVETA DIN 6885-A 200X20X12	CLAVETTE DIN6885-A 200X20X12
40	186296	GALV SPRINGS TYPE SZ 11 GIRB. (1 METER)	MUELLES GALV.TIPO SZ 11 GIRB. (1 METRO)	RESSORTS GALV TYPE SZ 11 GIRB. (1 METRE)
41	306316	SPRING	MUELLE TRACCION 500	RESSORT
42	166645	CYL.PLATE SCREW DIN7971 8X5/8"	TOR.CHAPA CILI.DIN7971 8X5/8"	VIS PLAQUE CIL.DIN7971 8X5/8"
43	136598	POLYESTER FELT 850G.5,1X3,3 (FOR PS-8030) (FOR MACHINES STEAM HEATING)	MULETON POLIESTER 850G.5,1X3,3 (PARA PS-8030) (PARA MODELOS CALEF. VAPOR)	MOLLETON POLYEST. 850G.5,1X3,3 (POUR PS-8030) (POUR MACHINES CHAUF.VAPEUR)
	189654	POLYESTER FELT 850G.5,1X3,6 (FOR PS-8033) (FOR MACHINES STEAM HEATING)	MULETON POLIESTER 850G.5,1X3,6 (PARA PS-8033) (PARA MODELOS CALEF. VAPOR)	MOLLETON POLYEST.850G.5,1X3,6 (POUR PS-8033) (POUR MACHINES CHAUF.VAPEUR)
	195669	POLYESTER FELT 850G 5,1X3,8 (FOR PS-8035) (FOR MACHINES STEAM HEATING)	MULETON POLIESTER 850G.5,1X3,8 (PARA PS-8035) (PARA MODELOS CALEF. VAPOR)	MOLLETON POLYEST.850G 5,1X3,8 (POUR PS-8035) (POUR MACHINES CHAUF.VAPEUR)
	136580	NOMEX FELT 800G.5,1X3,3 (FOR PS-8030) (FOR MACHINES OIL HEATING)	MULETON NOMEX 800G.5,1X3,3 (PARA PS-8030) (PARA MOD.CAL.ACEITE TERMICO)	MOLLETON NOMEX 800G.5,1X3,3 (POUR PS-8030) (POUR MACH.CHAUF.HUILE TER.)
	189670	NOMEX FELT 800G 5,1X3,6 (FOR PS-8033) (FOR MACHINES OIL HEATING)	MULETON NOMEX 800G.5,1X3,6 (PARA PS-8033) (PARA MOD.CAL.ACEITE TERMICO)	MOLLETON NOMEX 800G 5,1X3,6 (POUR PS-8033) (POUR MACH.CHAUF.HUILE TER.)
	197616	NOMEX FELT 800G 5,1X3,8 (FOR PS-8035) (FOR MACHINES OIL HEATING)	MULETON NOMEX 800G.5,1X3,8 (PARA PS-8035) (PARA MOD.CAL.ACEITE TERMICO)	MOLLETON NOMEX 800G. 5,1X3,8 (POUR PS-8035) (POUR MACH.CHAUF.HUILE TER.)
44	119057	BRASS LENS-HEAD S.DIN963 M6X25	TOR.AVELL.LATON DIN963 M 6X25	VIS T/FRAIS.LAIT.DIN963 M 6X25
45	119065	FELT FIXING PIECE	PIEZA FIJACION MULETON	PIECE FIXATION MOLLETON
46	119206	BRASS WIRE 0,8MM (1 METER)	ALAMBRE DE LATON 0,8 MM. (1 METRO)	FIL DE LAITON 0,8MM (1 METRE)

Nº	REF.	DENOMINATION	DENOMINACIÓN	DÉNOMINATION
47	245852	ROLL SIDE SEMI-DISK	SEMI-DISCO LATERAL RODILLO	SEMI-DISQUER LATERAL ROULEAU
48	245860	SIDE DISK SEPARATOR	SEPARADOR DISCO LATERAL	SEPARATEUR DISQUE LATERAL
49	146555	BICR.HEX SCREW DIN933-8 M10X55	TOR.EX.DIN933-8.8 B.TRI.M10X55	VIS HEX BICR.DIN933-8.8 M10X55
50	149500	BICR.WASHER B DIN125-ST 10,5	ARAN.B DIN125-ST B.TRI.10,5	RONDELLE B DIN125-ST BICR.10,5
51	220608	CONNECTING-ROD BRACKET	SOPORTE BIELA	SUPPORT BIELLE
52	147066	HEX SCREW 8G DIN933 M16X50	TOR.EX.DIN933-8.8 B.TRI.M16X50	VIS HEX. 8G DIN933 M16X50
53	285767	RIGHT CONNECTING-ROD	BIELA DERECHA	BIELLE DROITE
54	285775	LEFT CONNECTING-ROD	BIELA IZQUIERDA	BIELLE GAUCHE
55	188334	SELFOIL SLEEVE B11 A50-60-60	COJ. SELFOIL B11A50-60-60	FRETTE SELFOIL B11 A50-60-60
56	177345	FLEXIBLE RING E-50 DIN 471	ANILLO ELASTICO E-50 DIN 471	BAGUE ELASTIQUE E-50 DIN 471
57	220780	CONNECTING-ROD SHAFT	MUÑON BIELA	AXE BIELLE
58	175695	BIC.HEX SCREW DIN933-8 M16X35	TOR.EX.DIN933-8.8 B.TRI.M16X35	VIS HEX DIN933-8,8 BIC.M16X35
59	177444	SEAL 95X120X13	RETEN 95X120X13 RF.21164	RESERVE 95X120X13
60	170092	BEARING NO. 22217,NTN	RODAMIENTO 22217 E	ROULEMENT NO. 22217,NTN
61	245159	CONNECTING ROD SEAL COVER	TAPA RETEN BIELA	COUVERCLE RESERVE BIELLE
62	146399	BICR HEX SCREW DIN933-8 M8X20	TOR.EX.DIN933-8.8 B.TRI.M 8X20	VIS HEX DIN933-8.8 BICR.M8X20
63	149708	BICR.EXT.TOOT.WASH.DIN6798 M8	ARAN.DEN.EXT.B.TRI.DIN6798M 8	RONDEL.DEN.EX.BICR.DIN6798 M8
64	177451	SEAL 130X160X13 RF.20404	RETEN 130X160X13 RF.20404	RESERVE 130X160X13 RF.20404
65	177477	BEARING 23026,NTN	RODAMIENTO 23026 CC/W33	ROULEMENT 23026,NTN
66	201582	FAN CONNECTING-ROD CLAMP	BRIDA BIELA VENTILADOR	BRIDE BIELLE VENTILATEUR
67	146233	BICR.HEX SCREW DIN933-8 M6X15	TOR.EX.DIN933-8.8 B.TRI.M 6X15	VIS HEX DIN933-8.8 BICR.M6X15
68	149716	BICR.EXT TOOT.WASH.DIN6798 M6	ARAN.DEN.EXT.B.TRI.DIN6798M 6	RONDEL.DEN.EX.BICR DIN6798 M6
69	245365	CONNECTING ROD STRETCHER	TIRANTE BIELA	TIRANT BIELLE
70	206771	STRETCHER UPPER FIXING	FIJACION SUPERIOR TIRANTE	FIXATION SUPERIEURE TIRANT
71	206789	STRETCHER LOWER FIXING	FIJACION INFERIOR TIRANTE	FIXATION INFERIEURE TIRANT
72	306811	BICR.HEX NUT DIN936-8 M30	TUER.EX.REB.DIN936-8B.TRI.M30	ECROU HEX DIN936-8 BICR.M30
73	245381	CONNECTING ROD BOLT	BULON BIELA	BOULON BIELLE
74	131524	FLEXIBLE RING E-25 DIN 471	ANILLO ELASTICO E-25 DIN 471	BAGUE ELASTIQUE E-25 DIN 471
75	118109	HANDLE BOLT	BULON MANIVELA	BOULON MANIVELLE
76	249540	HANDLE	MANIVELA	MANIVELLE

Nº	REF.	DENOMINATION	DENOMINACIÓN	DÉNOMINATION
77	144220	ALLEN BUMP DIN916 M10X15	ESP.ALL.DIN916-10.9 M10X15	GOUJON ALLEN DIN916 M10X15
78	118133	BEARING END-PIECE RING	ANILLO TOPE COJINETE	BAGUE ARRET ROULEMENT
79	206839	HANDLE SHAFT PLATE	PLATINA EJE MANIVELAS	PLAQUE AXE MANIVELLES
80	147009	HEX SCREW 8G DIN 933 M-10X25	TOR.EX.DIN933-8.8 B.TRI.M10X25	VIS HEX. DIN 933 M-10X25 8G
81	127886	PIN DIN6885-A 56X12X8	CHAVETA DIN 6885-A 56X12X8	CLAVETTE DIN6885-A 56X12X8
82	245399	HANDLE SHAFT (FOR PS-8030)	EJE MANIVELAS (PARA PS-8030)	AXE MANIVELLE (POUR PS-8030)
	262725	HANDLE SHAFT (FOR PS-8033)	EJE MANIVELAS (PARA PS-8033)	AXE MANIVELLE (POUR PS-8033)
	263061	HANDLE SHAFT (FOR PS-8035)	EJE MANIVELAS (PARA PS-8035)	AXE MANIVELLE (POUR PS-8035)
83	245407	TIGHTENER ARM	BRAZO TENSOR	BRAS TENDEUR
84	175786	BIC.HEX SCREW DIN933-8.M16X40	TOR.EX.DIN933-8.8 B.TRI.M16X40	VIS HEX.DIN933-8,8 BICR M16X40
85	245415	TIGHTENER PIECE	PIEZA TENSOR	PIECE TENDEUR
86	164095	FLEXIBLE RING E-40 DIN 471	ANILLO ELASTICO E-40 DIN 471	BAGUE ELASTIQUE E-40 DIN 471
87	220756	GEAR-BOX TIGHTENER	TENSOR REDUCTOR	TENDEUR REDUCTEUR
88	150268	BICR.HEX NUT DIN934-8 M 20	TUER.EX.DIN934-8 B.TRI.M20	ECROU HEX.BICR.DIN934-8 M 20
89	285932	ROLL BLOCKER	BLOQUEO RODILLOS	BLOQUEUR ROULEAUX
90	177592	BI HEX SCREW DIN933-8.8 M14X25	TOR.EX.DIN933-8.8 B.TRI.M14X25	VIS HEX DIN933-8.8 M BIC.14X25
91	177378	PRES.GREASE-CUP1/4"STRAIGHTGAS	ENGRASADOR PRES.1/4"GAS RECTO	GRAISEUR PRES.1/4"GAZ DROIT

	WITHOUT ILLUSTRATION	SIN ILUSTRACION	SANS ILLUSTRATION
160622	PARAFFIN BOX 0,5 KG.	BOTE PARAFINA 0,5 KG.LLENO	BOITE PARAFFINE 0,5 KG.
160630	PARAFFIN BOX 5KG.	BOTE PARAFINA 5 KG.LLENO	BOITE PARAFFINE 5KG.
315218	SPECIAL WAX TIN 1 KG.	BOTE CERA ESPECIAL 1KG LLENO	BOITE CIRE SPECIALE 1 KG.
112854	SPECIAL WAX TIN 6KG	BOTE CERA ESPECIAL 6KG LLENO	BOITE CIRE SPECIALE 6KG
134742	BED CLEANING FELT	MULETON LIMP.CAÑAS 1000X1500MM	MOLLETON NETOYAGE CUVETTES
125286	IRONER BED CLEANING RESILLO	RESILLO LIMPIAR CAÑA CALANDRA	RESILLO NETOYAGE CUVETTE

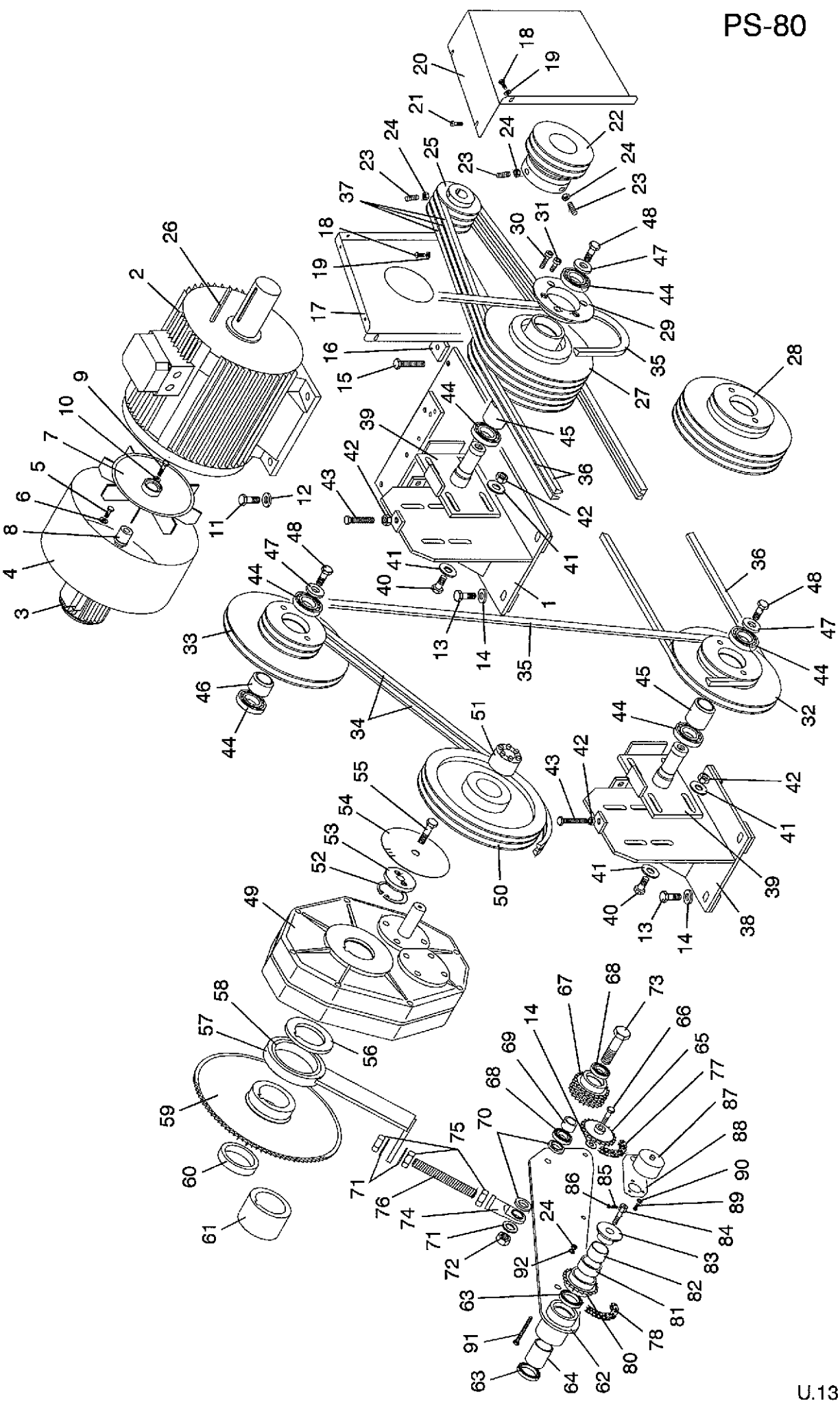

U.13117

Nº	REF.	DENOMINATION	DENOMINACIÓN	DÉNOMINATION
1	285445	MOVING SET PLATE	PLACA GRUPO MOTRIZ	PLAQUE GROUPE MOTRICE
2	305854	MOTOR MBT-160MA-2 III 11KW (FOR PS-80/1/2 M	MOTOR MBT-160MA-2 III 11KW (PARA PS-80/1/2 M)	MOTEUR MBT-160MA-2 III 11KW (POUR PS-80/1/2 M)
	315556	BEARING 6209-2Z C3	RODAMIENTO 6209-2Z C3	ROULEMENT 6209-2Z C3
	305862	MOTOR MBT-180M-2 III 22KW (FOR PS-80/3 M)	MOTOR MBT-180M-2 III 22KW (PARA PS-80/3 M)	MOTEUR MBT-180M-2 III 22KW (POUR PS-80/3 M)
	315572	BEARING 6211-2Z C3 (COUPLING SIDE)	RODAMIENTO 6211-2Z C3 (LADO ACOPLE)	ROULEMENT 6211-2Z C3 (COTE COUPLAGE)
	315564	BEARING 6210-2Z C3 (FAN SIDE)	RODAMIENTO 6210-2Z C3 (LADO VENTILADOR)	ROULEMENT 6210-2Z C3 (CÔTÈ VENTILATEUR)
	175042	MOTOR 220V 50HZ (FOR PS-80/1 S) (FOR 220V 50HZ)	MOTOR 132-170/4 220V 50HZ (PARA PS-80/1 S) (PARA 220V 50HZ)	MOTEUR 220V 50HZ (POUR PS-80/1 S) (POUR 220V 50HZ)
	175059	MOTOR 1LA3133-1AJ40 380V 50HZ (FOR PS-80/1 S) (FOR 380V 50HZ)	MOTOR 132-170/4 380V 50HZ (PARA PS-80/1 S) (PARA 380V 50HZ)	MOTEUR 1LA3133-1AJ40 380V 50HZ (POUR PS-80/1 S) (POUR 380V 50HZ)
	199703	MOTOR 132-170/4 208-220V 60HZ (FOR PS-80/1 S) (FOR 208-220V 60HZ)	MOTOR 132-170/4 208-220V 60HZ (PARA PS-80/1 S) (PARA 208-220V 60HZ)	MOTEUR 132-170/4 208-220V 60HZ (POUR PS-80/1 S) (POUR 208-220V 60HZ)
	199711	MOTOR 132-170/4 380V 60HZ (FOR PS-80/1 S) (FOR 380V 60HZ)	MOTOR 132-170/4 380V 60HZ (PARA PS-80/1 S) (PARA 380V 60HZ)	MOTEUR 132-170/4 380V 60HZ (POUR PS-80/1 S) (POUR 380V 60HZ)
	304964	BEARING 6308-2Z QE6	RODAMIENTO 6308-2Z	ROULEMENT 6308-2Z QE6
3	305821	MOTOR MT 45 45/2 (FOR PS-80 M)	MOTOR MT 45 45/2 (PARA PS-80 M)	MOTEUR MT 45 45/2 (POUR PS-80 M)
4	287888	FAN BRACKET (FOR PS-80/1/2 M	SOPORTE VENTILADOR (PARA PS-80/1/2 M)	SUPPORT VENTILATEUR (POUR PS-80/1/2 M)
	290221	FAN BRACKET (FOR PS-80/3)	SOPORTE VENTILADOR (PARA PS-80/3)	SUPPORT VENTILATEUR (POUR PS-80/3)
5	146274	BICR.HEX SCREW DIN933-8 M-5X10	TOR.EX.DIN933-8.8 B.TRI.M 5X10	VIS HEX.BICR.DIN933-8.8 M-5X10
6	149534	BICR.WASHER B DIN125-ST 5,3	ARAN.B DIN125-ST B.TRI. 5,3	RONDELLE B BICR.DIN125-ST 5,3
7	305847	FAN BLADE (FOR PS-80 M)	HELICE VENT.ABB AE42295045-15 (PARA PS-80 M)	PELLE VENTILATEUR (POUR PS-80 M)
8	287904	MOTOR BLADE SUPLEMENT	ADAPTADOR HELICE MOTOR	SUPPLEMENT PELLE VENTIL.MOTEUR
9	198051	BICR HEX SCREW DIN931-8.M4X35	TOR.EX.DIN931-4.8 B.TRI.M 4X35	VIS HEX BICR.DIN931-8.8 M 4X35
10	287920	WASHER 14X4,5X2	ARANDELA 14X4,5X2	RONDELLE 14X4,5X2
11	147074	HEX SCREW 8G DIN 933 M12X40 (FOR PS-80/1/2)	TOR.EX.DIN933-8.8 B.TRI.M12X40 (PARA PS-80/1/2)	VIS HEX. 8G DIN 933 M12X40 (POUR PS-80/1/2)

Nº	REF.	DENOMINATION	DENOMINACIÓN	DÉNOMINATION
	146738	BI HEX SCREW DIN933-8.8 M14X45 (FOR PS-80/3) (FOR PS-80/2 M-3)	TOR.EX.DIN933-8.8 B.TRI.M14X45 (PARA PS-80/3) (PARA PS-80/2 M-3)	VIS HEX DIN933-8.8 BICR M14X45 (POUR PS-80/3) (POUR PS-80/2 M-3)
12	149419	BICR.WASHER B DIN125-ST 13 (FOR PS-80/1/2)	ARAN.B DIN125-ST B.TRI.13 (PARA PS-80/1/2)	RONDELLE B DIN125-ST BICR.13 (POUR PS-80/1/2)
	149393	BICR WASHER B DIN125-ST 15 (FOR PS-80/3) (FOR PS-80/2 M-3)	ARAN.B DIN125-ST B.TRI.15 (PARA PS-80/3) (PARA PS-80/2 M-3)	RONDELLE B BICR DIN125-ST 15 (POUR PS-80/3) (POUR PS-80/2 M-3)
13	147181	HEX SCREW 8G DIN933 M 16X45	TOR.EX.DIN933-8.8 B.TRI.M16X45	VIS HEX. 8G DIN933 M 16X45
14	149385	BICR.WASHER B DIN125-ST 17	ARAN.B DIN125-ST B.TRI.17	RONDELLE B DIN125-ST BICR.17
15	246959	BASE REGULATION SCREW	TORNILLO REGULACION BASE	VIS REGULATION BASE
16	118166	REGULATION SCREW SUPPORT	APOYO TORNILLO REGULACION	APPUI ECROU REGULATION
17	285536	MOTOR PROTECTION PIECE	CARTELA PROTECCION MOTOR	PIECE PROTECTION MOTEUR
18	146233	BICR.HEX SCREW DIN933-8 M6X15	TOR.EX.DIN933-8.8 B.TRI.M 6X15	VIS HEX DIN933-8.8 BICR.M6X15
19	149526	BICR.WASHER B DIN125-ST 6,4	ARAN.B DIN125-ST B.TRI. 6,4	RONDELLE B DIN125-ST BICR.6,4
20	285528	MOTOR PROTECTION COVER	ENVOLVENTE PROTECCION MOTOR	COUVERCLE PROTECTION MOTEUR
21	183400	CYL.PLATE SCREW ST-4 20 C/AL	TOR.CHAPA ST-4 20 C/AL.T25	VIS PLAQUE CYL.ST-4 20 C/AL
22	245308	MOVING PULLEY (FOR PS-80/1 S) (FOR 5OHZ)	POLEA MOTRIZ (PARA PS-80/1 S) (PARA 50 HZ)	POULIE MOTRICE (POUR PS-80/1 S) (POUR 50 HZ)
	264523	MOVING PULLEY (FOR PS-80/1 S) (FOR 60HZ)	POLEA MOTRIZ (PARA PS-80/1 S) (PARA 60 HZ)	POULIE MOTRICE (POUR PS-80/1 S) (POUR 60 HZ)
23	144212	ALLEN BUMP DIN916-10.9 M8X 35	ESP.ALL.DIN916-10.9 M 8X35	GOUJON ALLEN DIN916-10.9 M8X35
24	150201	BICR.HEX NUT DIN 934-8 M-8	TUER.EX.DIN934-8 B.TRI.M 8	ECROU HEX.DIN 934-8 BICR.M-8
25	291476	MOVING PULLEY (FOR PS-80/1/2 M	POLEA MOTRIZ (PARA PS-80/1/2 M)	POULIE MOTRICE (POUR PS-80/1/2 M)
	291484	MOVING PULLEY (FOR PS-80/3)	POLEA MOTRIZ (PARA PS-80/3)	POULIE MOTRICE (POUR PS-80/3)
26	128025	PIN DIN 6885-A 100X12X8 (FOR PS-80/1/2 M	CHAVETA DIN 6885-A 100X12X8 (PARA PS-80/1/2 M)	CLAVETTE DIN 6885-A 100X12X8 (POUR PS-80/1/2 M)
	307637	PIN DIN 6885-A 100X14X9 (FOR PS-80/3)	CHAVETA DIN 6885-A 100X14X9 (PARA PS-80/3)	CLAVETTE DIN 6885-A 100X14X9 (POUR PS-80/3)
	110155	PIN DIN 6885-A 70X10X8 (FOR PS-80/1 S)	CHAVETA DIN 6885-A 70X10X8 (PARA PS-80/1 S)	CLAVETTE DIN 6885-A 70X10X8 (POUR PS-80/1 S)
27	285429 *	LOWER INTERMEDIARY PULLEY (FOR PS-80/2/3)	POLEA LOCA INFERIOR (PARA PS-80/2/3)	POULIE INTERMEDIA INFERIEUR (POUR PS-80/2/3)

Nº	REF.	DENOMINATION	DENOMINACIÓN	DÉNOMINATION
28	245290	LOWER INTERMEDIARY PULLEY (FOR PS-80/1 S)	POLEA LOCA INFERIOR (PARA PS-80/1 S)	POULIE INTERMEDIAIRE INFERIEUR (POUR PS-80/1 S)
	288936	LOWER INTERMEDIARY PULLEY (FOR PS-80/1 M)	POLEA LOCA INFERIOR (PARA PS-80/1 M)	POULIE INTERMEDIA INFERIEUR (POUR PS-80/1 M)
29	285437	VARIABLE PULLEY (FOR PS-80 M)	POLEA VARIADORA (PARA PS-80 M)	POULIE VARIABLE (POUR PS-80 M)
30	144410	SCREW ALLEN DIN912 M-8X35	TOR.ALLDIN912-8.8 B.TRI.M 8X35	VIS ALLEN DIN912 M-8X35
31	306647	SCREW ALLEN DIN912 BIC.M8X1X30	TOR.ALLDIN912-8.8B.TRI.M8X1X30	VIS ALLEN DIN912 BICR.M8X1X30
32	245191	LOWER INTERMEDIARY PULLEY 1ST (FOR PS-80/2/3)	POLEA LOCA INFERIOR 1ª (PARA PS-80/2/3)	POULIE INTERM.INFERIEURE 1EME (POUR PS-80/2/3)
33	245167	UPPER INTERMEDIARY PULLEY	POLEA LOCA SUPERIOR	POULIE INTERMEDIAIRE SUPERIEUR
34	177402	TRAPEZOIDAL BELT SPB-1900	CORREA TRAPECIAL SPB-1900	COURROIE TRAPEZOIDALE SPB-1900
35	177394	TRAPEZOIDAL BELT SPB-2240	CORREA TRAPECIAL SPB-2240	COURROIE TRAPEZOIDALE SPB-2240
36	177543	TRAPEZOIDAL BELT SPA-3550 (FOR PS-80/2/3)	CORREA TRAPECIAL SPA-3550 (PARA PS-80/2/3)	COURROIE TRAPEZOIDALE SPA-3550 (POUR PS-80/2/3)
37	193896	BELT SPA 1700 (FOR PS-80/1/2 M	CORREA TRAPECIAL SPA-1700 (PARA PS-80/1/2 M)	COURROIE SPA 1700 (POUR PS-80/1/2 M)
	306878	TRAPEZOIDAL BELT SPA-1857 (FOR PS-80/3) (FOR PS-80/2 M-3)	CORREA TRAPECIAL SPA-1857 (PARA PS-80/3) (PARA PS-80/2 M-3)	COURROIE TRAPEZOIDAL SPA-1857 (POUR PS-80/3) (POUR PS-80/2 M-3)
	305888	TRAPEZOIDAL BELT SPZ-1737 (FOR PS-80/1 S)	CORREA TRAPECIAL SPZ-1737 (PARA PS-80/1 S)	COURROIE TRAPEZOIDAL SPZ-1737 (POUR PS-80/1 S)
38	246496	LOWER PULLEY BRACKET (FOR PS-80/2/3)	SOPORTE POLEA INFERIOR (PARA PS-80/2/3)	SUPPORT POULIE INFERIEURE (POUR PS-80/2/3)
39	220806	LOWER PULLEY SHAFT	MUÑON POLEA INFERIOR	AXE POULIE INFERIEURE
40	163600	HEX SCREW 8G DIN-933 M-14X60	TOR.EX.DIN933-8.8 B.TRI.M14X60	VIS HEX 8G DIN-933 M-14X60
41	219071	WASHER 40X15X5	ARANDELA 40X15X5	RONDELLE 40X15X5
42	150250	BICR HEX.NUT DIN 934-8 M 14	TUER.EX.DIN934-8 B.TRI.M14	ECROU HEX.BICR DIN 934-8 M 14
43	177576	BIC.HEX SCREW DIN933-8 M14X100	TOR.EX.DIN933-8.8B.TRI.M14X100	VIS HEX BICR DIN933-8 M14X100
44	177469	BEARING 6009-2RS	RODAMIENTO 6009-2RS1	ROULEMENT 6009-2RS
45	245316	BEARING SEPARATOR	SEPARADOR COJINETES	SEPARATEUR ROULEMENTS
46	245324	BEARING SEPARATOR	SEPARADOR COJINETES	SEPARATEUR ROULEMENTS
47	200626	WASHER 50X17X9	ARANDELA 50X17X9	RONDELLE 50X17X9
48	146837	BICR.HEX SCREW DIN933-8 M16X30	TOR.EX.DIN933-8.8 B.TRI.M16X30	VIS HEX BICR.DIN933-8.8 M16X30
49	177428	PENDULAR GEAR-BOX R-21 180	REDUCTOR PEND.ROSSI R-2I 180	REDUCTEUR PENDULAIRE R-21 180

Nº	REF.	DENOMINATION	DENOMINACIÓN	DÉNOMINATION
	166413	SUPERGRAS OIL 455/85 W 140 (1 LITRE)	ACEITE HOUGHTON CKC-460 (1 LITRO)	HUILE SUPERGRAS 455/85 W 140 (1 LITRE)
50	245175	GEAR-BOX PULLEY	POLEA REDUCTOR	POULIE REDUCTEUR
51	136564	SLEEVE 5A 42X75	UNIDAD FIJ.AUTOCENT.5A 42X 75	MANCHON 5A 42X75
52	177386	FLEXIBLE RING I-70 DIN 472	ANILLO ELASTICO I- 70 DIN 472	BAGUE ELASTIQUE I-70 DIN 472
53	245241	GEAR-BOX ASSEMBLY WASHER	ARANDELA MONTAJE REDUCTOR	RONDELLE MONTAGE REDUCTEUR
54	285510	ROLL SPEED WADJUSTING PIECE (FOR PS-80/2/3)	PATRON AJUSTE VEL.RODILLOS (PARA PS-80/2/3)	PIECE REGLAGE VITESSE ROULEAUX (POUR PS-80/2/3)
55	147066	HEX SCREW 8G DIN933 M16X50	TOR.EX.DIN933-8.8 B.TRI.M16X50	VIS HEX. 8G DIN933 M16X50
56	246397	GEAR-BOX WHEEL SEPARATOR	SEPARADOR RUEDA REDUCTOR	SEPARATEUR ROUE REDUCTEUR
57	246355	TIGHTENER CONNECTING-ROD (INCLUDING BEARING)	BIELA TENSOR (INCLUYE COJINETE)	BIELLE TENDEUR (COMPRIS ROULEMENT)
58	246363	TIGHT.CONNECTING-ROD BEARING	COJINETE BIELA TENSOR	ROULEMENT BIELLE TENDEUR
59	221457	ROLL TRANSMISSION WHEEL	RUEDA TRANSMISION RODILLO	ROUE TRANSMISSION ROULEAU
60	245258	GEAR BOX-CONNECTING ROD SEPAR. (FOR 1 ROLL)	SEPARADOR BIELA-REDUCTOR (PARA 1 RODILLO)	SEPARATEUR BIELLE-REDUCTEUR (POUR 1 ROULEAU)
61	245266	GEAR BOX-CONNECTING ROD SEPAR. (EXCEPT 1ST ROLL)	SEPARADOR BIELA-REDUCTOR (EXCEPTO 1ER RODILLO)	SEPARATEUR BIELLE-REDUCTEUR (SAUF 1ER ROULEAU)
62	220962	CLOTH INLET CONNECTING-ROD	BIELA ENTRADA ROPA	BIELLE ENTREE LINGE
63	128520	BEARING 6006-2RS	RODAMIENTO 6006-2RS1	ROULEMENT 6006-2RS
64	220947	BEARING SEPARATOR	SEPARADOR COJINETES	SEPARATEUR ROULEMENTS
65	177253	TIGHTENER WHEEL 1/2" 18TEETH	RUEDA TENSORA 1/2" 18 DIENTES	OUE TENDEUSE 1/2" 18DENTS
66	175786	BIC.HEX SCREW DIN933-8.M16X40	TOR.EX.DIN933-8.8 B.TRI.M16X40	VIS HEX.DIN933-8,8 BICR M16X40
67	220889	REVERSER PINION	PIÑON INVERSOR	PIGNON INVERSEUR
68	128504	BEARING 6004 2RS	RODAMIENTO 6004-2RS	ROULEMENT 6004 2RS
69	220905	REVERSER PINION SEPARATOR	SEPARADOR PIÑON INVERSOR	SEPARATEUR PIGNON INVERSEUR
70	220921	WASHER	ARANDELA	RONDELLE
71	149427	BICR WASHER B DIN125-ST 21	ARAN.B DIN125-ST B.TRI.21	RONDELLE B BICR.DIN125-ST 21
72	150268	BICR.HEX NUT DIN934-8 M 20	TUER.EX.DIN934-8 B.TRI.M20	ECROU HEX.BICR.DIN934-8 M 20
73	220939	REVERSING SCREW	TORNILLO CONTRAMARCHA	VIS CONTREMARCHE
74	178053	HINGE-JOINT TYPE GIR 20UK	ROTULA TIPO GIR 20 UK	ROTULE TYPE GIR 20UK
75	178046	BICR HEX NUT DIN934-8 M20X1,5	TUER.EX.DIN934-8 B.TRI.M20X1,5	ECROU HEX.BICR.DIN934 M20X1,5

Nº	REF.	DENOMINATION	DENOMINACIÓN	DÉNOMINATION
76	220954	TIGHTENER BUMP	ESPARRAGO TENSOR	GOUJON TENDEUR
77	304741 &	INLET ROLL CHAIN 1/2-2388	CADENA RODILLO ENTR.-1/2-2388	CHAINE ROULEAU ENTREE 1/2-2388
	105031	STRAIGHT CHAIN COUPLING 1/2"	ENGANCHE CADENA RECTO,1/2"	UNION CHAINE DROIT 1/2"
78	315325 &	INLET ROLL CHAIN 1/2-1143	CADENA RODILLO ENTR.-1/2-1143	CHAINE ROULEAU ENTREE 1/2-1143
	105031	STRAIGHT CHAIN COUPLING 1/2"	ENGANCHE CADENA RECTO,1/2"	UNION CHAINE DROIT 1/2"
80	289025	CLOTH INLET SINGLE PINION	PIÑON SIMPLE ENTRADA ROPA	PIGNON SIMPLE ENTREE LINGE
81	305912	SLEEVE	CASQUILLO MARCHA LIBRE HFL3030	FRETTE
82	305920	RING IR-25X30X38,5	ANILLO INTERIOR IR-25X30X38,5	BAGUE INTERIEUR IR-25X30X38,5
83	289058	SUPPLEMENT	SUPLEMENTO	SUPPLEMENT
84	192831	BICR.HEX SCREW DIN 933-8 M8X30 (FOR PS-80/1 S)	TOR.EX.DIN933-8.8 B.TRI.M 8X30 (PARA PS-80/1 S)	VIS HEX DIN 933-8,8 BIC.M8X30 (POUR PS-80/1 S)
	285494	ENCODER SCREW (FOR PS-80 M)	TORNILLO ENCODER (PARA PS-80 M)	VIS ENCODER (POUR PS-80 M)
85	144006	ALLEN BUMP DIN 913 M-4X20	ESP.ALL.DIN913-10.9 M 4X20	GOUJON ALLEN DIN 913 M-4X20
86	150185	BICR.HEX.NUT DIN934-8 M4	TUER.EX.DIN934-8 B.TRI.M 4	ECROU HEX.DIN934-8 BICR.M4
87	197285	ENCODER (FOR PS-80 M)	ENCODER (PARA PS-80 M)	ENCODER (POUR PS-80 M)
88	285502	ENCODER ANTI-ROTATION PIECE (FOR PS-80 M)	PIEZA ANTI-ROTACION ENCODER (PARA PS-80 M)	PIECE ANTI-ROTATION ENCODER (POUR PS-80 M)
89	146027	BICR CYL SCREW DIN84-4 M 3X 7	TOR.CIL.DIN84-4.8 B.TRI.M 3X7	VIS CYL BICR DIN84-4.8 M 3X 7
90	192708	BICR.EXT.TOOT.WASH.DIN6798 M3	ARAN.DEN.EXTER.B.TRI.DIN6798M3	RONDEL.DEN.EX.BICR.DIN6798 M3
91	146464	BICR.HEX SCREW DIN933-8 M8X100 (FOR PS-80 M)	TOR.EX.DIN933-8.8 B.TRI.M8X100 (PARA PS-80 M)	VIS HEX BICR.DIN933-8 M 8X100 (POUR PS-80 M)
92	149518	BICR.WASHER B DIN125-ST 8,4	ARAN.B DIN125-ST B.TRI. 8,4	RONDELLE.B DIN125-ST BICR.8,4

*	285411	VAR.PULLEY SET	CONJUNTO POLEA VARIADORA	POULIE VAR. COMPLET
&	167403	1M.SIMPLE CHAIN 1/2"X5/16"	1M.CADENA SIMPLE 1/2"X5/16"	1M.CHAÎNE SIMPLE 1/2"X5/16"

N°	REF.	DENOMINATION FROM MACHINE N° 745.057	DENOMINACIÓN A PARTIR DE LA MÁQUINA N° 745.057	DÉNOMINATION A PARTIR DE LA MACHINE N° 745.057
80	292490	CLOTH INLET SINGLE PINION	PIÑON SIMPLE ENTRADA ROPA	PIGNON SIMPLE ENTREE LINGE
82	315242	RING IR-25X30X32	ANILLO INTERIOR IR-25X30X32	BAGUE INTERIEUR IR-25X30X32
83	292516	WASHER 40X8,5X4	ARANDELA 40X8,5X4	RONDELLE 40X8,5X4
84	146399	BICR HEX SCREW DIN933-8 M8X20 (FOR PS-80/1 S)	TOR.EX.DIN933-8.8 B.TRI.M 8X20 (PARA PS-80/1 S)	VIS HEX DIN933-8.8 BICR.M8X20 (POUR PS-80/1 S)
	292524	ENCODER SCREW (FOR PS-80 M)	TORNILLO ENCODER (PARA PS-80 M)	VIS ENCODER (POUR PS-80 M)
	292508	WASHER 40X25,5X4	ARANDELA 40X25,5X4	RONDELLE 40X25,5X4

N°	REF.	DENOMINATION FROM MACHINE N° 745.080	DENOMINACIÓN A PARTIR DE LA MÁQUINA N° 745.080	DÉNOMINATION A PARTIR DE LA MACHINE N° 745.080
2	316042	MOTOR M2AA160MA2 220/380 11KW (FOR PS-80/1/2 M	MOTOR M2AA160MA2 220/380 11KW (PARA PS-80/1/2 M)	MOTEUR M2AA160MA2 220/380 11KW (POUR PS-80/1/2 M)
	317461	BEARING 6309-2Z C3 (COUPLING SIDE)	RODAMIENTO 6309-2Z/C3 (LADO ACOPLE)	ROULEMENT 6309-2Z C3 (COTE COUPLAGE)
	315556	BEARING 6209-2Z C3 (FAN SIDE)	RODAMIENTO 6209-2Z C3 (LADO VENTILADOR)	ROULEMENT 6209-2Z C3 (CÔTÈ VENTILATEUR)
	317362	MOTOR M2AA160LB 220/380 22KW (FOR PS-80/3) (FOR PS-80/2 M-3)	MOTOR M2AA160LB 220/380 22KW (PARA PS-80/3) (PARA PS-80/2 M-3)	MOTEUR M2AA160LB 220/380 22KW (POUR PS-80/3) (POUR PS-80/2 M-3)
	317461	BEARING 6309-2Z C3 (COUPLING SIDE)	RODAMIENTO 6309-2Z/C3 (LADO ACOPLE)	ROULEMENT 6309-2Z C3 (COTE COUPLAGE)
	315556	BEARING 6209-2Z C3 (FAN SIDE)	RODAMIENTO 6209-2Z C3 (LADO VENTILADOR)	ROULEMENT 6209-2Z C3 (CÔTÈ VENTILATEUR)
4	293951	FAN BRACKET (FOR PS-80 M)	SOPORTE VENTILADOR (PARA PS-80 M)	SUPPORT VENTILATEUR (POUR PS-80 M)
25	299982	MOVING PULLEY (FOR PS-80/3) (FOR PS-80/2 M-3)	POLEA MOTRIZ (PARA PS-80/3) (PARA PS-80/2 M-3)	POULIE MOTRICE (POUR PS-80/3) (POUR PS-80/2 M-3)
26	128025	PIN DIN 6885-A 100X12X8	CHAVETA DIN 6885-A 100X12X8	CLAVETTE DIN 6885-A 100X12X8

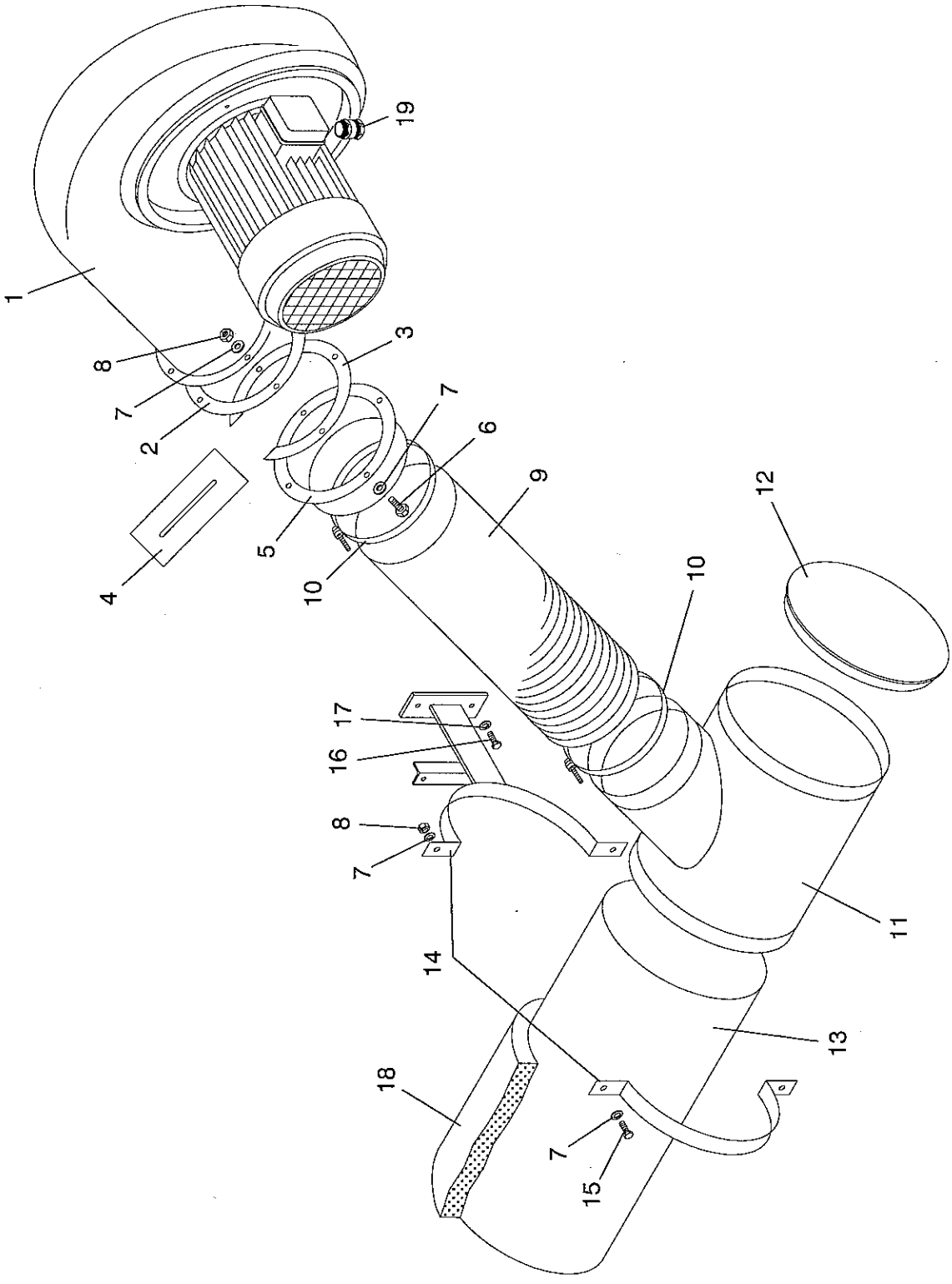
19
1
8
7
2
3
7
6
9
12
4
5
10
10
17
16
8
7
11
14
13
18
7
15

Nº	REF.	DENOMINATION	DENOMINACIÓN	DÉNOMINATION
1	177436	FAN CMA-528-2T 50HZ (FOR 5OHZ)	VENTILADOR CMA-528-2T 50HZ (PARA 50 HZ)	VENTILATEUR CMA-528-2T 50HZ (POUR 50 HZ)
	193847	FAN TURBINE CMA-528-2T 50HZ (FOR 5OHZ)	TURBINA VENTIL.CMA-528-2T 50HZ (PARA 50 HZ)	TURBINE VENTIL.CMA-528-2T 50HZ (POUR 50 HZ)
	183533	FAN CMA-528-2T 60HZ (FOR 60HZ)	VENTILADOR CMA-528-2T 60HZ. (PARA 60 HZ)	VENTILATEUR CMA-528-2T 60HZ (POUR 60 HZ)
	193854	FAN TURBINE CMA-528-2T 60HZ (FOR 60HZ)	TURBINA VENTIL.CMA-528-2T 60HZ (PARA 60 HZ)	TURBINE VENTIL.CMA-528-2T 60HZ (POUR 60 HZ)
2	245811	FAN OUTLET GASKET	JUNTA SALIDA VENTILADOR	JOINT SORTIE VENTILATEUR
3	245837	FAN OUTLET SUPPLEMENT	SUPLEMENTO SALIDA VENTILADOR	SUPPLEMENT SORTIE VENTILATEUR
4	245829	FAN OUTLET REGULATOR	REGULADOR SALIDA VENTILADOR	REGULATEUR SORTIE VENTILATEUR
5	246462	FAN OUTLET	SALIDA VENTILADOR	SORTIE VENTILATEUR
6	146332	BIC HEX SCREW DIN933-8.8 M6X30	TOR.EX.DIN933-8.8 B.TRI.M 6X30	VIS HEX DIN933-8.8 BICR.M 6X30
7	149526	BICR.WASHER B DIN125-ST 6,4	ARAN.B DIN125-ST B.TRI. 6,4	RONDELLE B DIN125-ST BICR.6,4
8	150227	BICR HEX NUT DIN934-8 M6	TUER.EX.DIN934-8 B.TRI.M 6	ECROU HEX DIN934-8 BICR.M6
9	175851	BIFLEX PIPE D150 (1 METER)	TUBO VENA HT D150 (1 METRO)	TUYAUTERIE BIFLEX D150 (1 METRE)
10	177311	CLAMP 301818-3D149-161	ABRAZADERA 149-161	BRIDE 301818-3D149-161
11	304857	RECOVERY T	TE REDUCCION	T REDUCTION
12	304873	ASPIRATION HOSE COVER	TAPA TUBO ASPIRACION	COUVERCLE TUBE ASPIRATION
13	304865	ASPIRATION HOSE (FOR 2 AND 3 ROLLS)	TUBO ASPIRACION (PARA 2 Y 3 RODILLOS)	TUBE ASPIRATION (POUR 2 ET 3 ROULEAUX)
14	285726	CLAMP	ABRAZADERA	BRIDE
15	192856	HEX SCREW 8G DIN 933 M 6X 25	TOR.EX.DIN933-8.8 B.TRI.M 6X25	VIS HEX.8G DIN 933 M 6X 25
16	146399	BICR HEX SCREW DIN933-8 M8X20	TOR.EX.DIN933-8.8 B.TRI.M 8X20	VIS HEX DIN933-8.8 BICR.M8X20
17	149518	BICR.WASHER B DIN125-ST 8,4	ARAN.B DIN125-ST B.TRI. 8,4	RONDELLE.B DIN125-ST BICR.8,4
18	178822	ISOLANTING PLATE 2000X1000X15	CHAPA ESPU,M-151 2000X1000X15	PLAQUE ISOLANTE 2000X1000X15
	319475	ADHESIVE RUBBER (COIL)50MM 10M	ROLLO GOMA ADHESIVA 50MM(10M)	GOMME ADHESIVE (ROUL) 50MM 10M
19	341602	STUFFING-BOX EXADIN 031625 M16	PRENSAE. EXADIN 031625 M16	PRESSE-ETOUPES EXADIN031625M16

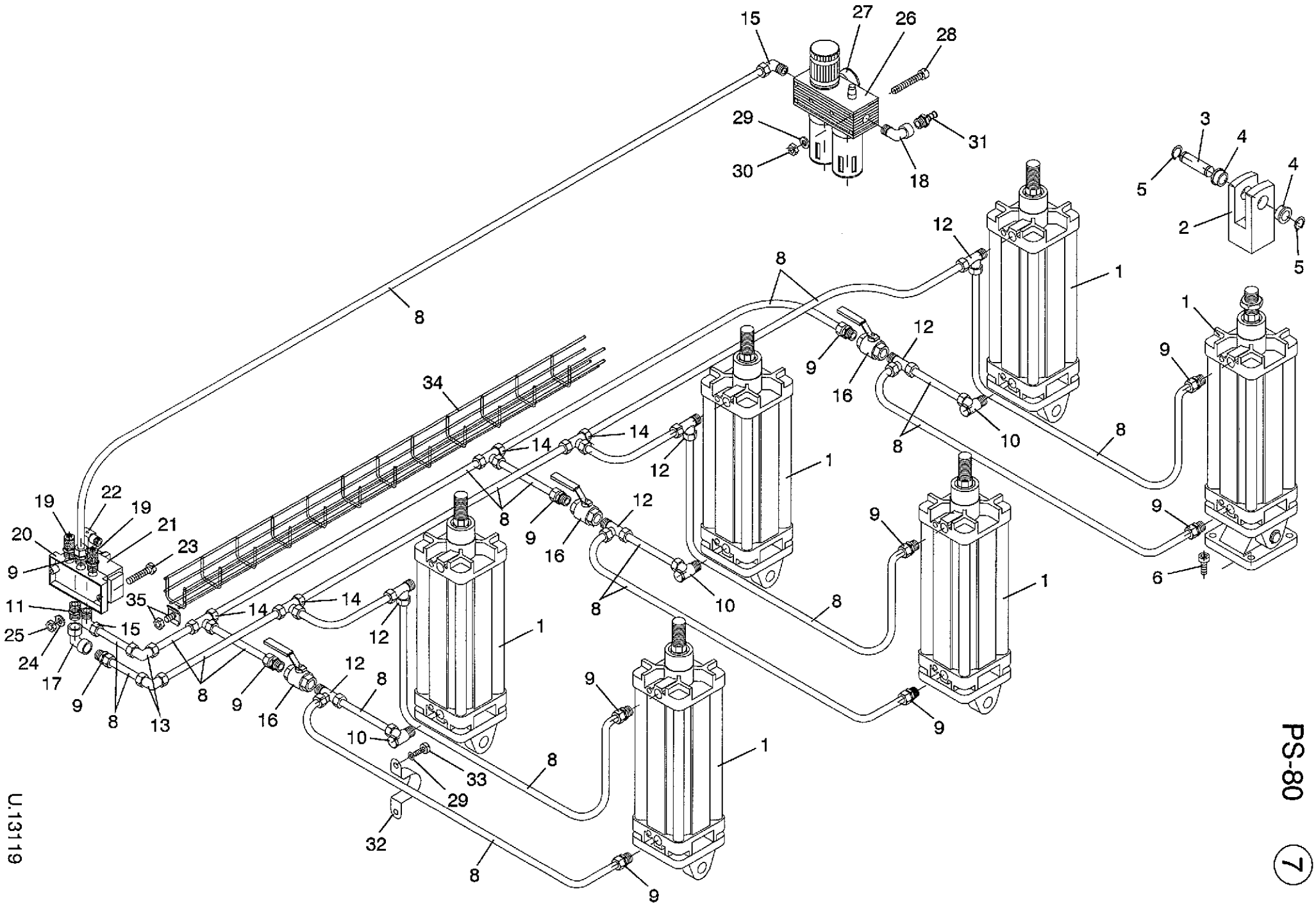

U.13119

PS-80 (7)

Nº	REF.	DENOMINATION	DENOMINACIÓN	DÉNOMINATION
1	305300	PNEUMATIC CYLINDER K290 125250	CILINDRO NEUM.K290 125250/L/F	CYLINDRE PNEUMAT. K290 125250
	315507	CYLINDER GASKET SET K290	KIT JUNTAS CILIND.K290 125250	KIT JOINTS CYL.K290 125250
2	292573	CYLINDER FORK	HORQUILLA CILINDRO	FOURCHE CYLINDRE
3	285981	CYLINDER BOLT	BULON CILINDRO	GOUJON CYLINDRE
4	285973	CYLINDER SLEEVE	CASQUILLO CILINDRO	FRETTE CYLINDRE
5	174524	FLEXIBLE RING E-22 DIN 471	ANILLO ELASTICO E-22 DIN 471	BAGUE ELASTIQUE E-22 DIN 471
6	181313	ALLEN SCREW DIN912 M12X35	TOR.ALLDIN912-8.8 B.TRI.M12X35	VIS ALLEN DIN912 M12X35
8	178426	NYLON HOSE D14X11 (1 METER)	TUBO NYLON D14X11 (1 METRO)	TUBE NYLON D14X11 (1 METRE)
9	178442	SIMPLE JOINTING REF.1011421	UNION SIMPLE REF.1011421	UNION SIMPLE REF.1011421
10	305367	ELBOW	CODO ORIENTABLE REF.118.14.21	COUDE
11	178434	MALE DOUBLE JOINTING 1/2"	UNION DOBLE MACHO 1/2 01212121	UNION DOUBLE MALE 1/2"
12	178483	T REF.1031421	T REF.1031421	T REF.1031421
13	315200	ELBOW D14 (FOR 2 AND 3 ROLLS)	CODO IGUAL D14 01021400 (PARA 2 Y 3 RODILLOS)	COUDE D14 (POUR 2 ET 3 ROULEAUX)
14	178475	T EQUAL REF.1041400 (FOR 2 AND 3 ROLLS)	T IGUAL REF.1041400 (PARA 2 Y 3 RODILLOS)	T EGALE REF.1041400 (POUR 2 ET 3 ROULEAUX)
15	178293	SIMPLE ELBOW 1/2" REF.1091421	CODO SIMPLE 1/2" REF.1091421	COUDE SIMPLE 1/2" REF.1091421
16	178418	VALVE PT-85 1/2"	VALV.BOLA SER.60 1/2"602112148	VANNE PT-85 1/2"
17	305797	ELBOW FEM. 1/2"	CODO HEMBRA 1/2" REF.143.21.21	COUDE FEM. 1/2"
18	305045	ELBOW 1/2"	CODO 1/2" REF.144.21.21	COUDE 1/2"
19	305318	REGULATOR-SILEN 1/2"	REGULADOR-SILENC.SUL-102.1/2"	REGULATEUR SILEN.1/2"
20	195594	BASE PLATE	PLACA BASE M/P19138	PLAQUE BASE
21	195586	ELECTROVALVE	ELECTROVALV.UM/22354B/172/MS	ELCTROVANNE
	320770	ELECT.GASKET KIT QM/22354/3/00	KIT JUNTAS ELECT.QM/22354/3/00	KIT JOINTS ELECT.QM/22354/3/00
22	195602	COIL 220V	BOBINA QM/48/89J/21+ CONECTOR	BOBINE 220V
23	146332	BIC HEX SCREW DIN933-8.8 M6X30	TOR.EX.DIN933-8.8 B.TRI.M 6X30	VIS HEX DIN933-8.8 BICR.M 6X30
24	149526	BICR.WASHER B DIN125-ST 6,4	ARAN.B DIN125-ST B.TRI. 6,4	RONDELLE B DIN125-ST BICR.6,4
25	150227	BICR HEX NUT DIN934-8 M6	TUER.EX.DIN934-8 B.TRI.M 6	ECROU HEX DIN934-8 BICR.M6
26	305292	COMPLET FILTER (INCLUDING MANOMETER)	GRUPO FILTRAJE REF.4484008/M (INCLUYE MANOMETRO)	GROUPE FILTRE (MANOMETRE COMPRIS)
27	137976	MANOMETER D50 12BARS	MANOMETRO D50-12BARS 34200062	MANOMETRE D50 12BARS

Nº	REF.	DENOMINATION	DENOMINACIÓN	DÉNOMINATION
28	305102	ALLEN SCREW DIN912 BICR.M5X 70	TOR.ALLDIN912-8.8B.TRI.M 5X 70	VIS ALLEN DIN912 BICR.M 5X 70
29	149534	BICR.WASHER B DIN125-ST 5,3	ARAN.B DIN125-ST B.TRI. 5,3	RONDELLE B BICR.DIN125-ST 5,3
30	150177	BICR HEX NUT DIN934-8 M5	TUER.EX.DIN934-8 B.TRI.M 5	ECROU HEX DIN934-8 BIC.M5
31	178301	SLEEVE 1/2" REF.1231321	ESPIGA ROSCADA 1/2"REF.1231321	MANCHON 1/2" REF.1231321
32	142141	CLIP FISCHER GMD28	GRAPA FISCHER GMD28	CLIP FISCHER GMD28
33	146126	BICR CYL SCREW DIN84-4 M-5X15	TOR.CIL.DIN84-4.8 B.TRI.M 5X15	VIS CYL BICR DIN84-4.8 M-5X15
34	285965	AIR HOSE DUCT (FOR 2 AND 3 ROLLS)	CANAL PASA-TUBOS AIRE (PARA 2 Y 3 RODILLOS)	CHANEL PASSE TUBES AIRE (POUR 2 ET 3 ROULEAUX)
35	305342	UNION BICROM. (FOR 2 AND 3 ROLLS)	UNION REJIBAND BICROM.64020061 (PARA 2 Y 3 RODILLOS)	UNION BICROM. (POUR 2 ET 3 ROULEAUX)

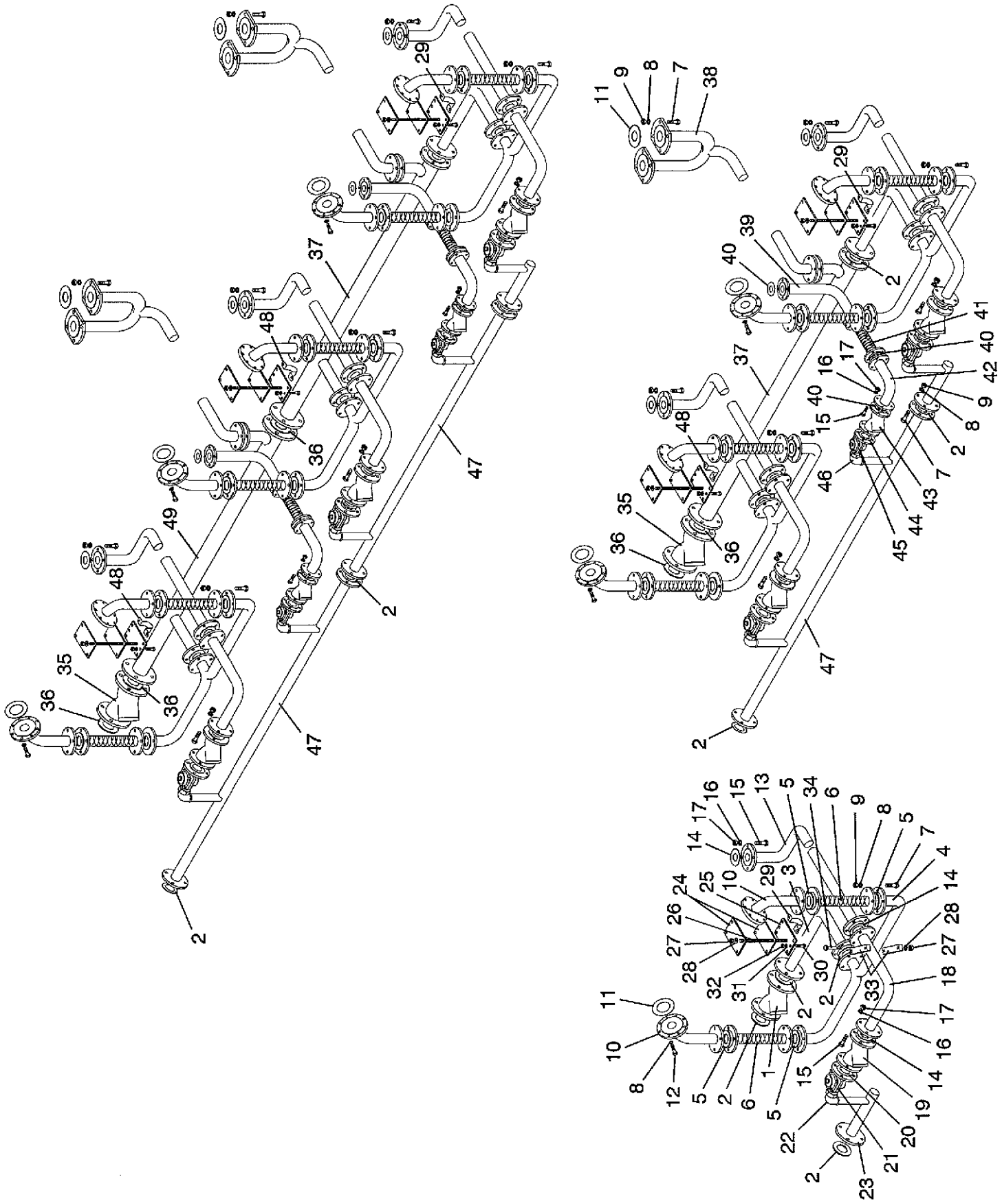
U.13120

Nº	REF.	DENOMINATION	DENOMINACIÓN	DÉNOMINATION
1	133686	FILTER WITH CLAMP 1 1/2"PN-16	FILTRO TIPO Y C/B 1-1/2"T.0,1	FILTRE AVEC BRIDE 1 1/2"PN-16
	317446	FILTER MESH Y C/B 1 1/2" 0,1	MALLA FILTRO Y C/B 1 1/2" 0,1	TAMIS FILTRE Y C/B 1 1/2" 0,1
2	133868	INOX SPIROMETAL. GASKET 1 1/2"	JUNTA SPIROMETAL.INOX 1-1/2"	JOINT SPIROMETAL.INOX 1 1/2"
3	286336	STEAM INLET	ENTRADA GENERAL VAPOR	ENTREE VAPEUR
4	285361	BED STEAM INLET	ENTRADA VAPOR CAÑA	ENTREE VAPEUR CUVETTE
5	133850	INOX SPIROMETAL.GASKET 1-1/4"	JUNTA SPIROMETAL.INOX 1-1/4"	JOINT SPIROMETAL.INOX 1-1/4"
6	304709	STEAM FLEXIBLE HOSE	TUBO FLEXIBLE VAPOR	TUBE FLEXIBLE VAPEUR
7	147082	HEX SCREW 8G DIN933 M16X60	TOR.EX.DIN933-8.8 B.TRI.M16X60	VIS HEX. 8G DIN933 M16X60
8	149385	BICR.WASHER B DIN125-ST 17	ARAN.B DIN125-ST B.TRI.17	RONDELLE B DIN125-ST BICR.17
9	150276	BICR HEX.NUT DIN934-8 M-16	TUER.EX.DIN934-8 B.TRI.M16	ECROU HEX.DIN934-8 BICR M-16
10	284547	BED INLET ELBOW	CODO ENTRADA CAÑA	COUDE ENTREE CUVETTE
11	151241	INOX SPIROMETALLIC GASKET 3"	JUNTA SPIROMETAL.INOX 3"	JOINT SPIROMETALLIQUE INOX 3"
12	147181	HEX SCREW 8G DIN933 M 16X45	TOR.EX.DIN933-8.8 B.TRI.M16X45	VIS HEX. 8G DIN933 M 16X45
13	247510	BED CONDENSATE HOSE (FOR PS-8030)	TUBO CONDENSADOS CAÑA (PARA PS-8030)	TUBE CONDENSATS CUVETTE (POUR PS-8030)
	257626	BED CONDENSATE HOSE (FOR PS-8033)	TUBO CONDENSADOS CAÑA (PARA PS-8033)	TUBE CONDENSATS CUVETTE (POUR PS-8033)
	264887	BED CONDENSATE HOSE (FOR PS-8035)	TUBO CONDENSADOS CAÑA (PARA PS-8035)	TUBE CONDENSATS CUVETTE (POUR PS-8035)
14	133843	INOX SPIROMETALLIC GASKET 1"	JUNTA SPIROMETAL.INOX 1"	JOINT SPIROMETALLIQUE INOX 1"
15	146985	HEX SCREW 8G DIN933 M-12X55	TOR.EX.DIN933-8.8 B.TRI.M12X55	VIS HEX. 8G DIN933 M-12X55
16	149419	BICR.WASHER B DIN125-ST 13	ARAN.B DIN125-ST B.TRI.13	RONDELLE B DIN125-ST BICR.13
17	150235	BICR.HEX NUT DIN 934-8 M-12	TUER.EX.DIN934-8 B.TRI.M12	ECROU HEX DIN 934-8 BICR.M-12
18	286351	BED CONDENSATE HOSE	TUBO CONDENSADOS CAÑA	TUBE CONDENSATS CUVETTE
19	133660	FILTER TYPE Y C/B 1" T.0,1	FILTRO TIPO Y C/B 1" T.0,1	FILTRE TYPE Y C/B 1" T.0,1
	317438	FILTER MESH Y C/B 1" 0,1	MALLA FILTRO Y C/B 1" 0,1	TAMIS FLITRE Y C/B 1" 0,1
20	289306	STEAM OUTLET COUPLING	ACOPLAMIENTO SALIDA VAPOR	UNION SORTIE VAPEUR
21	306118	PURGER TLV MOD. J3X 3/4"	PURGADOR TLV MODELO J3X 3/4"	PURGEUR TLV MOD.J3X 3/4"
	315291	THREADED FILTER J3X-13 DN 3/4"	FILTRO PURGADOR J3X-13 DN 3/4"	FILTRE FILETE J3X-13 DN 3/4"
22	166769	JOINTING FIG. 98 3/4" GALV.	FIGURA 98 DE 3/4" GALV.	UNION FIG. 98 3/4" GALV.
23	286450	CONDENSATION COLLECTOR	COLECTOR CONDENSACION	COLECTEUR CONDENSATION

Nº	REF.	DENOMINATION	DENOMINACIÓN	DÉNOMINATION
24	247767	STEAM HOSE FIXING	FIJACION TUBO VAPOR	FIXATION TUBE VAPEUR
25	247759	STEAM HOSE FIXING	FIJACION TUBO VAPOR	FIXATION TUBE VAPEUR
26	247775	STEAM HOSE BUMP	ESPARRAGO TUBO VAPOR	GOUJON TUBE VAPEUR
27	150193	BICR HEX NUT DIN 934-8 M10	TUER.EX.DIN934-8 B.TRI.M10	ECROU HEX DIN 934-8 BICR.M10
28	149500	BICR.WASHER B DIN125-ST 10,5	ARAN.B DIN125-ST B.TRI.10,5	RONDELLE B DIN125-ST BICR.10,5
29	177287	TWO FEET CLIP GMD-47	GRAPA DOS PIES FISCHER GMD-47	CLIP DEUX PIEDS GMD-47
30	146316	BICR.HEX SCREW DIN933-8 M-6X20	TOR.EX.DIN933-8.8 B.TRI.M 6X20	VIX HEX BICR.DIN933-8.8 M-6X20
31	149526	BICR.WASHER B DIN125-ST 6,4	ARAN.B DIN125-ST B.TRI. 6,4	RONDELLE B DIN125-ST BICR.6,4
32	150227	BICR HEX NUT DIN934-8 M6	TUER.EX.DIN934-8 B.TRI.M 6	ECROU HEX DIN934-8 BICR.M6
33	289918	CONDENSATE HOSE FIXING	FIJACION TUBO CONDENSADOS	FIXATION TUBE CONDENSATS
34	192765	HEX SCREW 8G DIN 931 M-10X120	TOR.EX.DIN931-8.8B.TRI.M10X120	VIS HEX 8G DIN 931 M-10X120
35	133694	FILTER WITH CLAMP 2"03PN16	FILTRO TIPO Y C/B 2" T.0,1	FILTRE AVEC BRIDE 2"03PN16
	317453	FILTER MESH Y C/B 2" 0,1	MALLA FILTRO Y C/B 2" 0,1	TAMIS FILTRE Y C/B 2" 0,1
36	133876	INOX SPIROMETALLIC GASKET 2"	JUNTA SPIROMETAL.INOX 2"	JOINT SPIROMETALLIQUE.INOX 2"
37	286419	STEAM INLET	ENTRADA GENERAL VAPOR	ENTREE VAPEUR
38	286427	JOINTING BED STEAM INLET (FOR PS-8030)	ENTRADA VAPOR CAÑA DE UNION (PARA PS-8030)	ENTREE VAPEUR CUVETTE UNION (POUR PS-8030)
	288720	JOINTING BED STEAM INLET (FOR PS-8033)	ENTRADA VAPOR CAÑA DE UNION (PARA PS-8033)	ENTREE VAPEUR CUVETTE UNION (POUR PS-8033)
	288746	JOINTING BED STEAM INLET (FOR PS-8035)	ENTRADA VAPOR CAÑA DE UNION (PARA PS-8035)	ENTREE VAPEUR CUVETTE UNION (POUR PS-8035)
39	247700	JOINTING BED CONDENSATE HOSE	TUBO CONDENSADOS CAÑA UNION	TUBE CONDENSATS CUVETTE UNION
40	133835	INOX SPIROMETALLIC GASKET 3/4"	JUNTA SPIROMETAL.INOX 3/4"	JOINT SPIROMETAL INOX 3/4"
41	178616	CONDENSATE FLEXIBLE HOSE	TUBO FLEXIBLE VAPOR	TUBE FLEXIBLE CONDENSATS
42	286377	JOINTING BED CONDENSATE ELBOW	CODO CONDENSADOS CAÑA UNION	COUDE CONDENSATS CUVETTE UNION
43	178574	FILTER WITH CLAMP 3/4"PN16	FILTRO TIPO Y C/B 3/4"T.0,1	FILTRE AVEC BRIDE 3/4"PN16
	317420	FILTER MESH Y C/B 3/4" 0,1	MALLA FILTRO Y C/B 3/4" 0,1	TAMIS FILTRE Y C/B 3/4" 0,1
44	247684	CONDENSATE OUTLET COUPLING	ACOPLAMIENTO SALIDA CONDENSAD.	UNION SORTIE CONDENSATS
45	306118	PURGER TLV MOD. J3X 3/4"	PURGADOR TLV MODELO J3X 3/4"	PURGEUR TLV MOD.J3X 3/4"
	315291	THREADED FILTER J3X-13 DN 3/4"	FILTRO PURGADOR J3X-13 DN 3/4"	FILTRE FILETE J3X-13 DN 3/4"
46	166769	JOINTING FIG. 98 3/4" GALV.	FIGURA 98 DE 3/4" GALV.	UNION FIG. 98 3/4" GALV.

Nº	REF.	DENOMINATION	DENOMINACIÓN	DÉNOMINATION
47	289314	CONDENSATION COLLECTOR	COLECTOR CONDENSACION	COLECTEUR CONDENSATION
48	177493	TWO FEET CLIP GMD-60	GRAPA DOS PIES FISCHER GMD-60	CLIP DEUX PIEDS GMD-60
49	287110	STEAM INLET	ENTRADA GENERAL VAPOR	ENTREE VAPEUR

WITHOUT ILLUSTRATION — SIN ILUSTRACION — SANS ILLUSTRATION

181123	ISOLATOR 1/2"X30	L1.20	CUBRETUBERIAS 1/2"X25	L.1,20	ISOLANT 1/2"X30	L1,20
181115	ISOLATOR 1" X30	L1.20	CUBRETUBERIAS 1"X25	L.1,20	ISOLANT 1" X30	L1,20
181107	ISOLATOR 1 1/2"X30	L1,20	CUBRETUBERIAS 1-1/2"X25	L.1,20	ISOLANT 1 1/2"X30	L1,20

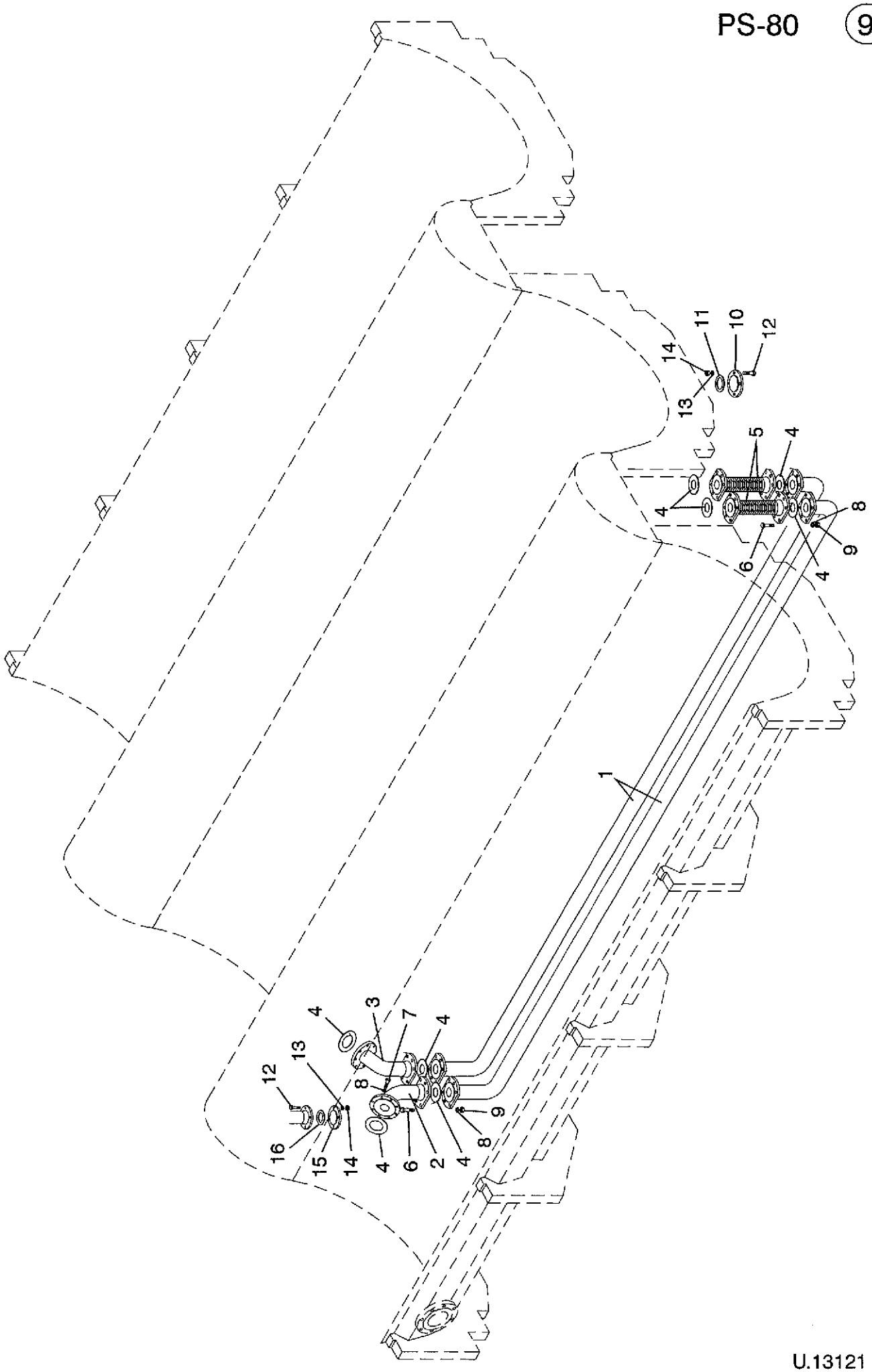

U.13121

Nº	REF.	DENOMINATION	DENOMINACIÓN	DÉNOMINATION
1	287326	OIL CIRCUIT HOSE (FOR PS-8030)	TUBO CIRCUITO ACEITE (PARA PS-8030)	TUBE CIRCUIT HUILE (POUR PS-8030)
	288860	OIL CIRCUIT HOSE (FOR PS-8033)	TUBO CIRCUITO ACEITE (PARA PS-8033)	TUBE CIRCUIT HUILE (POUR PS-8033)
	288886	OIL CIRCUIT HOSE (FOR PS-8035)	TUBO CIRCUITO ACEITE (PARA PS-8035)	TUBE CIRCUIT HUILE (POUR PS-8035)
2	247841	OIL CIRCUIT ELBOW	CODO CIRCUITO ACEITE	COUDE CIRCUIT HUILE
3	247874	OIL CIRCUIT ELBOW	CODO CIRCUITO ACEITE	COUDE CIRCUIT HUILE
4	151241	INOX SPIROMETALLIC GASKET 3"	JUNTA SPIROMETAL.INOX 3"	JOINT SPIROMETALLIQUE INOX 3"
5	305326	OIL CIRCUIT FLEXIBLE HOSE	LATIGUILLO CIRCUITO ACEITE	TUBE FLEXIBLE CIRCUIT HUILE
6	147082	HEX SCREW 8G DIN933 M16X60	TOR.EX.DIN933-8.8 B.TRI.M16X60	VIS HEX. 8G DIN933 M16X60
7	147181	HEX SCREW 8G DIN933 M 16X45	TOR.EX.DIN933-8.8 B.TRI.M16X45	VIS HEX. 8G DIN933 M 16X45
8	149385	BICR.WASHER B DIN125-ST 17	ARAN.B DIN125-ST B.TRI.17	RONDELLE B DIN125-ST BICR.17
9	150276	BICR HEX.NUT DIN934-8 M-16	TUER.EX.DIN934-8 B.TRI.M16	ECROU HEX.DIN934-8 BICR M-16
10	175869	BLIND CLAMP B-25 DIN2527 PN16	BRIDA CIEGA B-25 DIN 2527 PN16	BRIDE AVEUGLE B-25 DIN2527PN16
11	133843	INOX SPIROMETALLIC GASKET 1"	JUNTA SPIROMETAL.INOX 1"	JOINT SPIROMETALLIQUE INOX 1"
12	146985	HEX SCREW 8G DIN933 M-12X55	TOR.EX.DIN933-8.8 B.TRI.M12X55	VIS HEX. 8G DIN933 M-12X55
13	149419	BICR.WASHER B DIN125-ST 13	ARAN.B DIN125-ST B.TRI.13	RONDELLE B DIN125-ST BICR.13
14	150235	BICR.HEX NUT DIN 934-8 M-12	TUER.EX.DIN934-8 B.TRI.M12	ECROU HEX DIN 934-8 BICR.M-12
15	168633	BLIND CLAMP B-20 DIN2527	BRIDA CIEGA B-20 DIN2527 PN-16	BRIDE AVEUGLE B-20 DIN2527
16	133835	INOX SPIROMETALLIC GASKET 3/4"	JUNTA SPIROMETAL.INOX 3/4"	JOINT SPIROMETAL INOX 3/4"

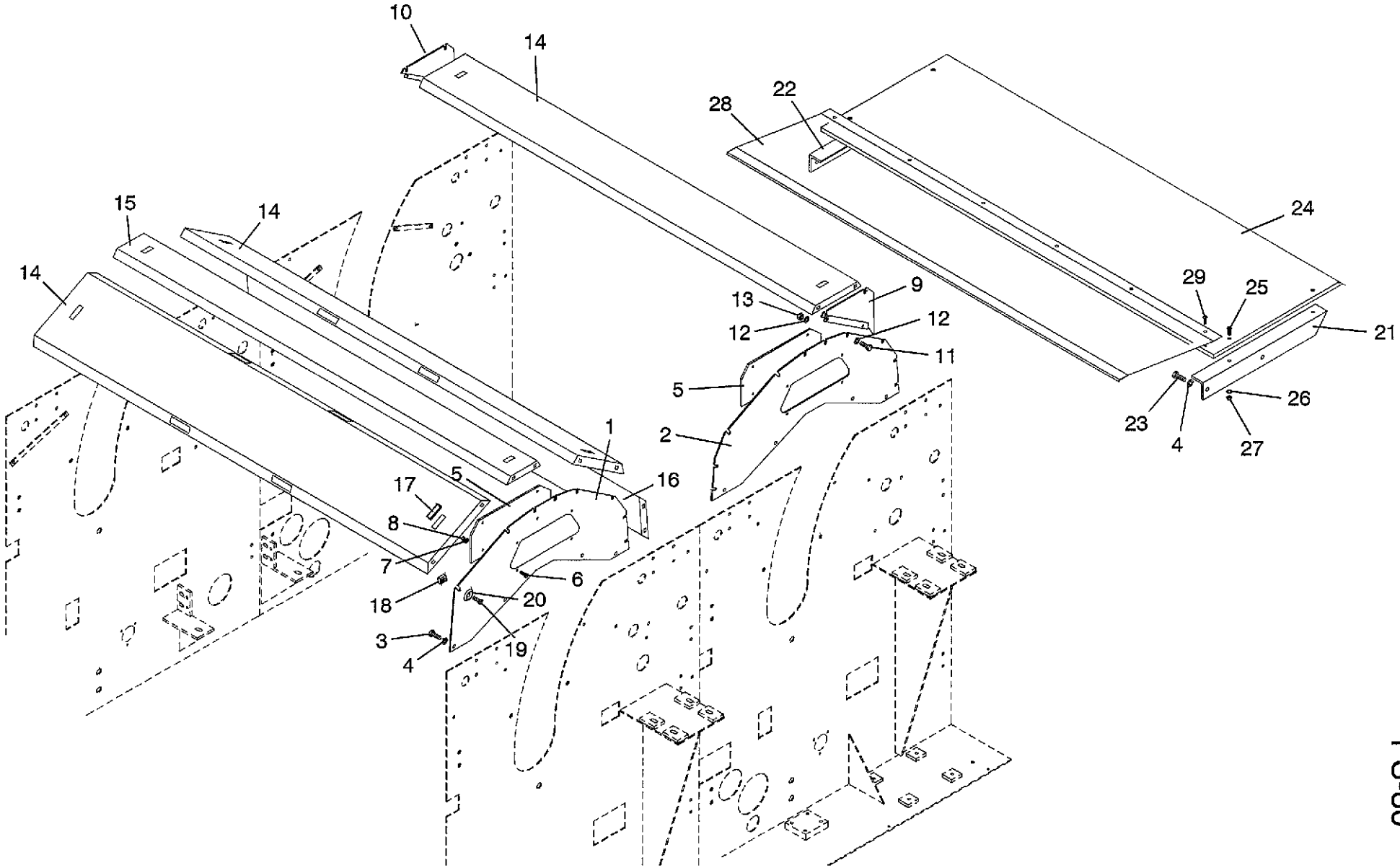
10
14
28
22
24
15
14
14
29
25
21
13
9
12
12
11
5
2
26
23
4
27
1
16
5
17
8
7
6
18
20
3
19
4

U.13149

Nº	REF.	DENOMINATION	DENOMINACIÓN	DÉNOMINATION
1	285825	UPPER COVER BRACKET	SOPORTE TAPAS SUPERIORES	SUPPORT COUVERCLES SUPERIEURS
2	285833	UPPER COVER BRACKET	SOPORTE TAPAS SUPERIORES	SUPPORT COUVERCLES SUPERIEURS
3	147025	HEX SCREW 8G DIN 933 M-12X30	TOR.EX.DIN933-8.8 B.TRI.M12X30	VIS HEX. 8G DIN933 M-12X30
4	149419	BICR.WASHER B DIN125-ST 13	ARAN.B DIN125-ST B.TRI.13	RONDELLE B DIN125-ST BICR.13
5	285841	ROLL SPYHOLE	MIRILLA RODILLO	FENTE DE VISEE DU ROULEAU
6	146126	BICR CYL SCREW DIN84-4 M-5X15	TOR.CIL.DIN84-4.8 B.TRI.M 5X15	VIS CYL BICR DIN84-4.8 M-5X15
7	149369	INOX A2 WASHER DIN 125 5,3	ARAN. DIN125 INOX A2 5,3	RONDELLE INOX A2 DIN 125 5,3
8	149914	INOX HEX. NUT DIN 934 M-5	TUER.EX.DIN934 INOX A2-70 M 5	ECROU HEX. INOX DIN 934 M-5
9	289827	UPPER II COVER BRACKET	SOPORTE TAPA SUPERIOR II	SUPPORT COUVERCLE SUPERIEUR II
10	289819	UPPER I COVER BRACKET	SOPORTE TAPA SUPERIOR I	SUPPORT COUVERCLE SUPERIEUR I
11	146399	BICR HEX SCREW DIN933-8 M8X20	TOR.EX.DIN933-8.8 B.TRI.M 8X20	VIS HEX DIN933-8.8 BICR.M8X20
12	149518	BICR.WASHER B DIN125-ST 8,4	ARAN.B DIN125-ST B.TRI. 8,4	RONDELLE.B DIN125-ST BICR.8,4
13	150201	BICR.HEX NUT DIN 934-8 M-8	TUER.EX.DIN934-8 B.TRI.M 8	ECROU HEX.DIN 934-8 BICR.M-8
14	285619	ROLL UPPER COVER (FOR PS-8030)	TAPA SUPERIOR RODILLO (PARA PS-8030)	COUVERCLE SUPERIEUR ROULEAU (POUR PS-8030)
	288050	ROLL UPPER COVER (FOR PS-8033)	TAPA SUPERIOR RODILLO (PARA PS-8033)	COUVERCLE SUPERIEUR ROULEAU (POUR PS-8033)
	288084	ROLL UPPER COVER (FOR PS-8035)	TAPA SUPERIOR RODILLO (PARA PS-8035)	COUVERCLE SUPERIEUR ROULEAU (POUR PS-8035)
15	285635	ROLL UPPER COVER (FOR PS-8030)	TAPA SUPERIOR RODILLO (PARA PS-8030)	COUVERCLE SUPERIEUR ROULEAU (POUR PS-8030)
	288118	ROLL UPPER COVER (FOR PS-8033)	TAPA SUPERIOR RODILLO (PARA PS-8033)	COUVERCLE SUPERIEUR ROULEAU (POUR PS-8033)
	288142	ROLL UPPER COVER (FOR PS-8035)	TAPA SUPERIOR RODILLO (PARA PS-8035)	COUVERCLE UPPER ROULEAU (POUR PS-8035)
16	285668	ROLL UPPER COVER (FOR PS-8030) (FOR 2 AND 3 ROLLS)	TAPA SUPERIOR RODILLO (PARA PS-8030) (PARA 2 Y 3 RODILLOS)	COUVERCLE SUPERIEUR ROULEAU (POUR PS-8030) (POUR 2 ET 3 ROULEAUX)
	288183	ROLL UPPER COVER (FOR PS-8033) (FOR 2 AND 3 ROLLS)	TAPA SUPERIOR RODILLO (PARA PS-8033) (PARA 2 Y 3 RODILLOS)	COUVERCLE SUPERIEUR ROULEAU (POUR PS-8033) (POUR 2 ET 3 ROULEAUX)
	288217	ROLL UPPER COVER (FOR PS-8035) (FOR 2 AND 3 ROLLS)	TAPA SUPERIOR RODILLO (PARA PS-8035) (PARA 2 Y 3 RODILLOS)	COUVERCLE SUPERIEUR ROULEAU (POUR PS-8035) (POUR 2 ET 3 ROULEAUX)
17	304923	KNOB P2-41	TIRADOR ENCASTRADO P2-41	POIGNEE P2-41
18	191924	CAGED NUT M8 1-1,7	TUER.ENJ.M8 1-1,7 R.310010-8	ECROU ENCAGE M8 1-1,7

Nº	REF.	DENOMINATION	DENOMINACIÓN	DÉNOMINATION
19	133033	INOX FLAT SCREW DIN85 M8X25 A2	TOR.PLA.DIN85 INOX A2-70 M8X25	VIS PLAT INOX DIN85 M8X25 A270
20	194498	LID WASHER	ARANDELA TAPAS	RONDELLE COUVERCLES
21	247908	TABLE RIGHT BRACKET (WITHOUT FOLDER)	SOPORTE DERECHO MESA (SIN PLEGADOR)	SUPPORT DROIT TABLE (SANS PLIEUSE)
22	247890	TABLE LEFT BRACKET (WITHOUT FOLDER)	SOPORTE IZQUIERDO MESA (SIN PLEGADOR)	SUPPORT GAUCHE TABLE (SANS PLIEUSE)
23	147199	BIC.HEX SCREW DIN933-8 M12X20	TOR.EX.DIN933-8.8 B.TRI.M12X20	VIS HEX DIN933-8,8 BICR.M12X20
24	178665	CLOTH OUTLET TABLE (FOR PS-8030) (WITHOUT FOLDER)	MESA SALIDA ROPA (PARA PS-8030) (SIN PLEGADOR)	TABLE SORTIE LINGE (POUR PS-8030) (SANS PLIEUSE)
	305805	CLOTH OUTLET TABLE (FOR PS-8033) (WITHOUT FOLDER)	MESA SALIDA ROPA (PARA PS-8033) (SIN PLEGADOR)	TABLE SORTIE LINGE (POUR PS-8033) (SANS PLIEUSE)
	305813	CLOTH OUTLET TABLE (FOR PS-8035) (WITHOUT FOLDER)	MESA SALIDA ROPA (PARA PS-8035) (SIN PLEGADOR)	TABLE SORTIE LINGE (POUR PS-8035) (SANS PLIEUSE)
25	144840	SCREW DIN963 INOX A2-70 M6X45	TOR.AV.DIN963 INOX A2-70 M6X45	VIS AV DIN963 INOX A2-70 M6X45
26	149526	BICR.WASHER B DIN125-ST 6,4	ARAN.B DIN125-ST B.TRI. 6,4	RONDELLE B DIN125-ST BICR.6,4
27	150227	BICR HEX NUT DIN934-8 M6	TUER.EX.DIN934-8 B.TRI.M 6	ECROU HEX DIN934-8 BICR.M6
28	206961	CLOTH OUTLET PLATE (FOR PS-8030) (WITHOUT FOLDER)	CHAPA SALIDA ROPA (PARA PS-8030) (SIN PLEGADOR)	PLAQUE SORTIE LINGE (POUR PS-8030) (SANS PLIEUSE)
	288845	CLOTH OUTLET PLATE (FOR PS-8033) (WITHOUT FOLDER)	CHAPA SALIDA ROPA (PARA PS-8033) (SIN PLEGADOR)	PLAQUE SORTIE LINGE (POUR PS-8033) (SANS PLIEUSE)
	288852	CLOTH OUTLET PLATE (FOR PS-8035) (WITHOUT FOLDER)	CHAPA SALIDA ROPA (PARA PS-8035) (SIN PLEGADOR)	PLAQUE SORTIE LINGE (POUR PS-8035) (SANS PLIEUSE)
29	148874	LENS-HEAD SCREW DIN97 20-20	TOR.AVELL.TIRAFOND.DIN97 20-20	VIS T/FRAISAGE DIN97 20-20

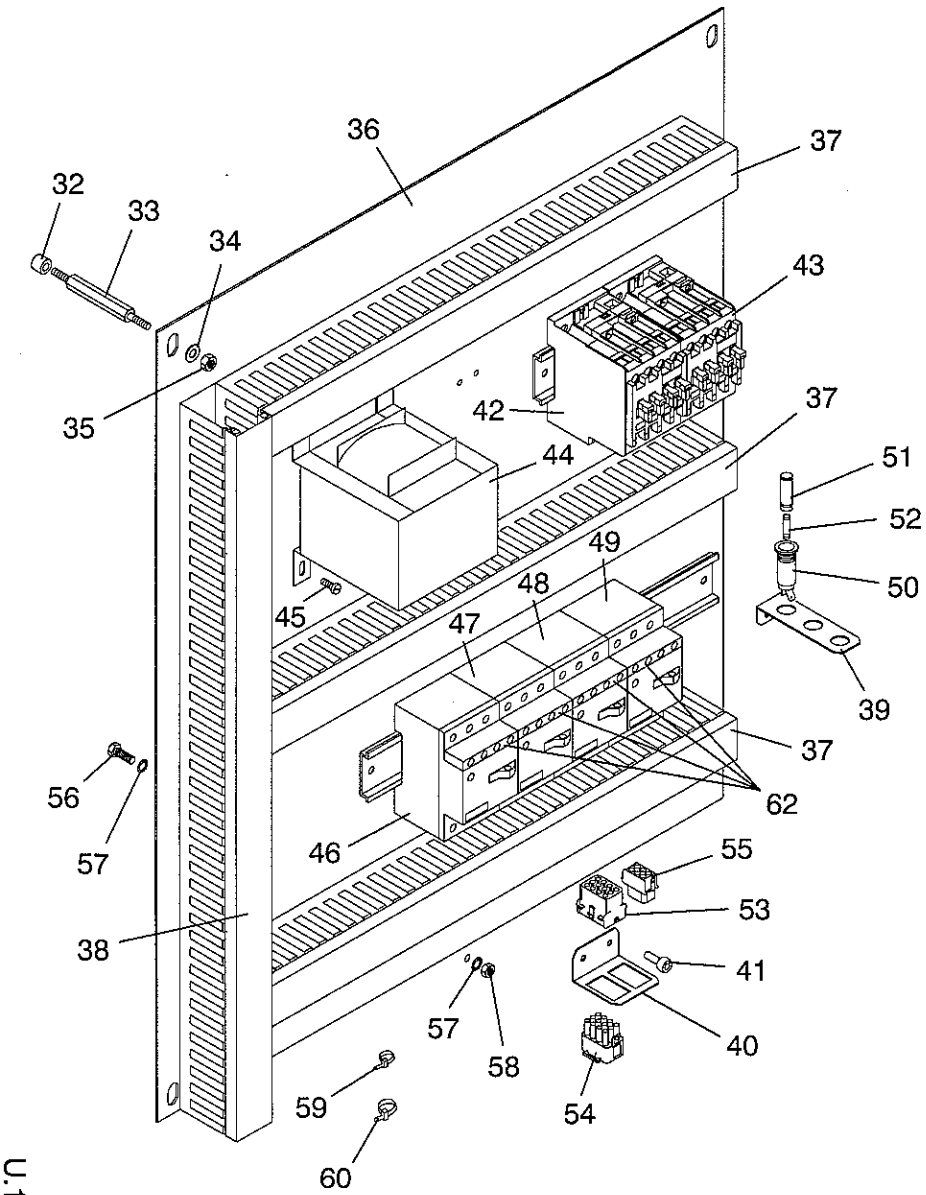

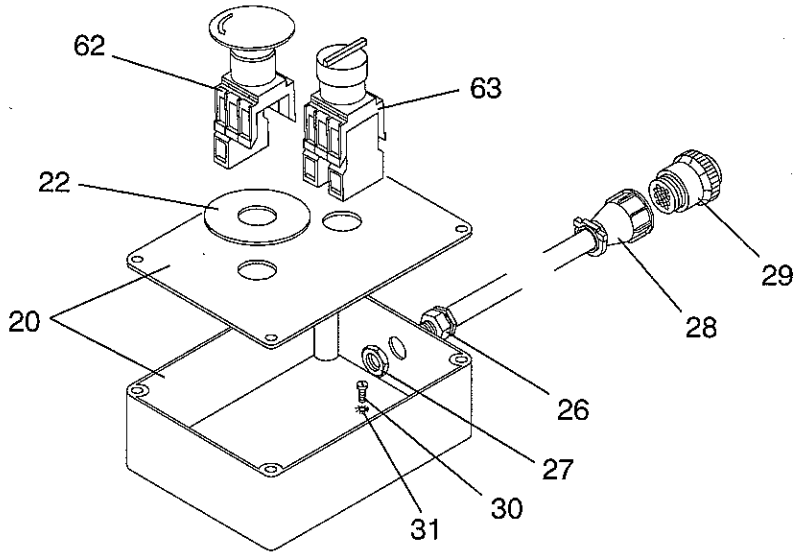

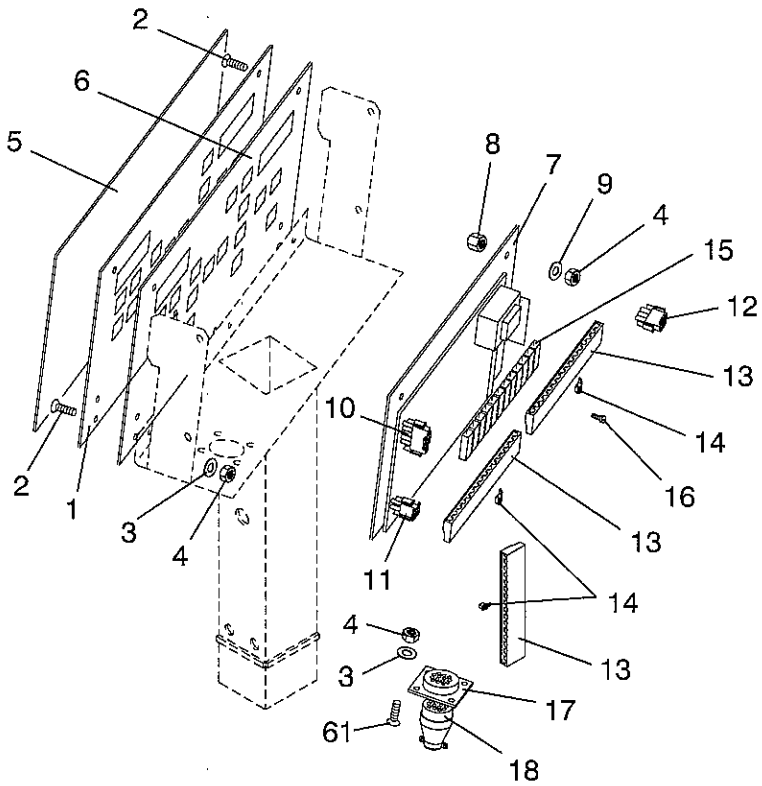

U.13185

PS-80 (11)

Nº	REF.	DENOMINATION	DENOMINACIÓN	DÉNOMINATION
1	277004	CONTROL CASE FRONT	FRONTAL CAJA MANDOS	FRONTAL BOÎTE COMMANDES
2	302604	BICR.SCREW DIN963-4.8 M 4X 20	TOR.AV.DIN963-4.8 B.TRI.M 4X20	VIS T/FRAIS.DIN963-4.B.M 4X 20
3	149732	BICR.EXT TOOT.WASH DIN6798 M4	ARAN.DEN.EXT.B.TRI.DIN6798M 4	RONDEL.DEN.EX.BICR.DIN6798 M4
4	150185	BICR.HEX.NUT DIN934-8 M4	TUER.EX.DIN934-8 B.TRI.M 4	ECROU HEX.DIN934-8 BICR.M4
5	304931	KEYBOARD PLATE PS-80 M	CARATULA TECLADO PS-80 M	PLAQUE CLAVIER PS-80 M
6	268664	PLATE ISOLATION	AISLANTE PLACA	ISOLANT PLAQUE
7	305219	PROCESSOR BOARD PS-80	PLACA MICROPROCESADOR PS-80(A)	PLAQUE MICROPROCESSEUR PS-80
	315358	EPROM PS-80 VER8.1	EPROM PS-80 VER8.1	EPROM PS-80 VER8.1
	187203	INPUT OPTOISOLATOR 4N35	OPTOACOPLADOR ENTRADA 4N35	OPTOISOLATOR ENTREE 4N35
	187211	OUTPUT OPTOISOLATOR S21MD4V	OPTOACOPLADOR SALIDA	OPTOISOLATOR SORTIE S21MD4V
	196410	DISPLAY TDSR 1350	DISPLAY TDSR 1350	DISPLAY TDSR 1350
8	283051	SEPARATOR M-4X5,7	SEPARADOR M-4X5,7	SEPARATEUR M-4X5,7
9	149476	BICR.WASHER B DIN125-ST 4,3	ARAN.B DIN125-ST B.TRI. 4,3	RONDELLE B DIN125-ST BICR.4,3
10	183913	PROTECTOR 1/480763-0	PROTECTOR 1/480763-0	PROTECTEUR 1/480763-0
11	183889	PROTECTOR 1/480698-0	PROTECTOR 1/480698-0	PROTECTEUR 1/480698-0
12	183897	PROTECTOR 1/480700-0	PROTECTOR 1/480700-0	PROTECTEUR 1/480700-0
13	197301	PROTECTOR AMP-UNYT 1-640029-6	PROTECTOR AMP-UNYT 1-640029-6	PROTECTEUR AMP-UNYT 1-640029-6
14	197426	POLARIZATION AMP 640180-1	POSICIONADOR AMP 640180-1	POLARIZATION AMP 640180-1
15	135442	CONNECTION-BOARD MAI E-ST-1	REGLETA MAI E-ST-1 PLANA 12ELE	REGLETTE MAI E-ST-1 12ELE
16	146092	BICR CYLD SCREW DIN84 M 4X 16	TOR.CIL.DIN84-4.8 B.TRI.M 4X16	VIS CYL BICR DIN84-4.8 M 4X 16
17	304899	PANEL FEMALE CONECTION	CONECTOR CPC 14V.HEMBRA PANEL	CONNECTEUR FEMELLE PANNEAU
18	286146	MAINTENANCE BRIDGE CONNECTOR	CONECTORA PUENTE MANTENIMIENTO	CONNECTEUR PONT MAINTENANCE
20	287383	CONTROL BOX	CAJA MANDO	BOITE COMMANDE
22	192294	YELLOW RING	ARO AMARILLO	BAGUE JAUNE
26	140103	STUFFING-BOX PG-11	PRENSAES.NORMADIX 601104 PG-11	PRESSE-ETOUPES PG-11
27	140236	COUNTERNUT PG-11	TUERCA PG 281104 PG-11	CONTREECROU PG-11
28	304915	WIRE BRACKET	SOPORTE CABLES ESTAN.182655-1	SUPPORT CABLES
29	304907	AIR MALE CONECTOR	CONECTOR CPC 14V.MACHO AEREO	CONNECTEUR MALE AERIEN
30	146068	BICR CYL SCREW DIN84-4.M 4X 5	TOR.CIL.DIN84-4.8 B.TRI.M 4X 5	VIS CYL BICR DIN84-4.8 M 4X 5
31	149732	BICR.EXT TOOT.WASH DIN6798 M4	ARAN.DEN.EXT.B.TRI.DIN6798M 4	RONDEL.DEN.EX.BICR.DIN6798 M4

Nº	REF.	DENOMINATION	DENOMINACIÓN		DÉNOMINATION
32	264663	SUSPENSION SLEEVE	CASQUILLO SUSPENSION		FRETTE SUSPENSION
33	273250	PROTECTION COVER BOLT	PERNO TAPA PROTECCION		GOUJON COUVERCLE PROTECTION
34	149518	BICR.WASHER B DIN125-ST 8,4	ARAN.B DIN125-ST B.TRI. 8,4		RONDELLE.B DIN125-ST BICR.8,4
35	150201	BICR.HEX NUT DIN 934-8 M-8	TUER.EX.DIN934-8 B.TRI.M 8		ECROU HEX.DIN 934-8 BICR.M-8
36	286328	INSTALLATION BOX PLATE	PLACA CAJA INSTALACION		PLAQUE BOITE INSTALLATION
37	286807	WIRE-STOP DUCT	CANAL PASACABLES		CHANEL PASSECABLES
38	286815	WIRE-STOP DUCT	CANAL PASACABLES		CHANEL PASSECABLE
39	281691	FUSE BRACKET	SOPORTE FUSIBLES		SUPPORT FUSIBLES
40	286823	CONNECTOR BRACKET	SOPORTE CONECTORAS		SUPPORT CONNECTEURS
41	151878	RIVET POP TLP/D/636/BS4,8X 9,1	REMA.POP TLP/D/636/BS 4,8X 9,1		RIVET TLP/D/636/BS 4,8X 9,1
42	193441	CONTACTOR 3TF30 01-OAN2	CONTACTOR 3TF30 01-OAN2	ZZ	CONTACTEUR 3TF30 01-OAN2
	194050	COIL 3TY7 403-OAN2	BOBINA 3TY7 403-OAN2	ZZ	BOBINE 3TY7 403-OAN2
43	193433	CONTACTOR 3TF31 01-OAN2	CONTACTOR 3TF31 01-OAN2	ZZ	CONTACTEUR 3TF31 01-OAN2
	194050	COIL 3TY7 403-OAN2	BOBINA 3TY7 403-OAN2	ZZ	BOBINE 3TY7 403-OAN2
44	300756	TRANSFORMER IP00 100 VA (FOR 200-208-220-240-380V)	TRANSFORMADOR IP00 100 VA (PARA 200-208-220-240-380V)		TRANSFORMATEUR IP00 100 VA (POUR 200-208-220-240-380V)
	300772	TRANSFORMER IP00 100 VA (FOR 415V)	TRANSFORMADOR IP00 100 VA (PARA 415V)		TRANSFORMATEUR IP00 100 VA (POUR 415V)
	300764	TRANSFORMER IP00 100 VA (FOR 440V)	TRANSFORMADOR IP00 100 VA (PARA 440V)		TRANSFORMATEUR IP00 100 VA (POUR 440V)
45	183400	CYL.PLATE SCREW ST-4 20 C/AL	TOR.CHAPA ST-4 20 C/AL.T25		VIS PLAQUE CYL.ST-4 20 C/AL
46	138180	AUTOMAT. SWITCH 3VU13 00-1MG00	INTERRUPTOR AUT.3VU1300-1MG	ZZ	INTERRUPTEUR AU.3VU13 00-1MG00
47	138172	AUTOMAT. SWITCH 3VU13 00-1MJ00	INTERRUPTOR AUT.3VU1300-1MJ	ZZ	INTERRUPTEUR AU.3VU13 00-1MJ00
48	138172	AUTOMAT. SWITCH 3VU13 00-1MJ00 (FOR PS-80/2/3)	INTERRUPTOR AUT.3VU1300-1MJ (PARA PS-80/2/3)	ZZ	INTERRUPTEUR AU.3VU13 00-1MJ00 (POUR PS-80/2/3)
49	138172	AUTOMAT. SWITCH 3VU13 00-1MJ00 (FOR PS-80/3)	INTERRUPTOR AUT.3VU1300-1MJ (PARA PS-80/3)	ZZ	INTERRUPTEUR AU.3VU13 00-1MJ00 (POUR PS-80/3)
50	160119	FUSE HOLDER REF.FEC 031 1631	PORTAFUSIBLES REF.FEC.031.1631		PORTE-FUSIBLE REF.FEC 031 1631
51	137661	BAYONET HEAD	CABEZA BAYONETA FEK.031.1613		TETE BAYONETTE
52	182485	FUSE FST 0034.5225 1A	CART.FUSIB.FST 0034.5225 1 A		CARTOUCHE FUS.FST 0034.5225 1A
53	139402	PROTECTOR 1/480709-0	PROTECTOR 1/480709-0		PROTECTEUR 1/480709-0
54	139410	PROTECTOR 1/480708-0	PROTECTOR 1/480708-0		PROTECTEUR 1/480708-0

Nº	REF.	DENOMINATION	DENOMINACIÓN	DÉNOMINATION
55	139444	PROTECTOR 1/480705-0	PROTECTOR 1/480705-0	PROTECTEUR 1/480705-0
56	146282	BICR.HEX SCREW DIN933-8 M 5X15	TOR.EX.DIN933-8.8 B.TRI.M 5X15	VIS HEX BICR.DIN933-8.8 M 5X15
57	149724	BICR EXT.TOOT.WASH.DIN6798 M5	ARAN.DEN.EXT.B.TRI.DIN6798M 5	RONDEL DEN.EX.BICR.DIN6798 M5
58	150177	BICR HEX NUT DIN934-8 M5	TUER.EX.DIN934-8 B.TRI.M 5	ECROU HEX DIN934-8 BIC.M5
59	140434	CLAMP 2221	BRIDA UNEX 2221	BRIDE 2221
60	140525	CLAMP 2244-0	BRIDA UNEX 2244-0	BRIDE 2244-0
61	147611	SCREW DIN963-4.8 BICR M 4X10	TOR.AV.DIN7991 B.TRI.M 4X10	VIS AV DIN963-4.8 BICR M 4X10
62	341230	PS EMERGENCY STOP	PARO EMERGENCIA PS	ARRET EMERGENCE PS
63	341644	ROTATION DIRECTION SELECTOR	SELECTOR SENTIDO GIRO	SELECTEUR SENS ROTATION

N°	REF.	DENOMINATION FROM MACHINE N° 745.149	DENOMINACIÓN A PARTIR DE LA MÁQUINA N° 745.149	DÉNOMINATION A PARTIR DE LA MACHINE N° 745.149
7	321299	PROCESSOR BOARD PS-80(F)	PLACA MICROPROCESADOR PS-80(F)	PLAQUE MICROPROCESEUR PS-80(F)
	328591	EPROM BOARD PS-80 (FUJI) VER1.	EPROM PS-80(FUJI) VER1.0	EPROM PS-80(FUJI)VER1.0

Nº	REF.	DENOMINATION FROM MACHINE Nº 745.246	DENOMINACIÓN A PARTIR DE LA MÁQUINA Nº 745.246	DÉNOMINATION A PARTIR DE LA MACHINE Nº 745.246
42	326199	CONTACTOR 3RT10 16-1AP02	CONTACTOR 3RT10 16-1AP02	CONTACTEUR 3RT10 16-1AP02
43	320846	CONTACTOR 3RT10 24-1AL2	CONTACTOR 3RT10 24-1AL2	CONTACTEUR 3RT10 24-1AL2
	321240	COIL 3RT1924-5AL21 230-50/60	BOBINA 3RT1924-5AL21 230-50/60	BOBINE 3RT1924-5AL21 230-50/60
46	326314	AUTOMAT.SWITCH 3RV10 11-1AA.0	INTERRUPT.AUT.3RV10 11-1AA10	INTERUPTEUR AUT.3RV10 11-1AA1.
47	326215	AUT.SWITCH 3RV10 11-1EA1.0	INTERRUPT.AUT.3RV10 11-1EA1.0	INTERRUPTEUR AUT.3RV10 11-1EA1
48	326215	AUT.SWITCH 3RV10 11-1EA1.0 (FOR PS-80/2/3) (FOR PS-80/2 M-3)	INTERRUPT.AUT.3RV10 11-1EA1.0 (PARA PS-80/2/3) (PARA PS-80/2 M-3)	INTERRUPTEUR AUT.3RV10 11-1EA1 (POUR PS-80/2/3) (POUR PS-80/2 M-3)
49	326215	AUT.SWITCH 3RV10 11-1EA1.0 (FOR PS-80/3)	INTERRUPT.AUT.3RV10 11-1EA1.0 (PARA PS-80/3)	INTERRUPTEUR AUT.3RV10 11-1EA1 (POUR PS-80/3)
62	326306	AUXILIARY CONTACT 3RV19 01-1E	CONTACTO AUXILIAR 3RV19 01-1E	CONTACT AUXILIARE 3RV19 01-1E

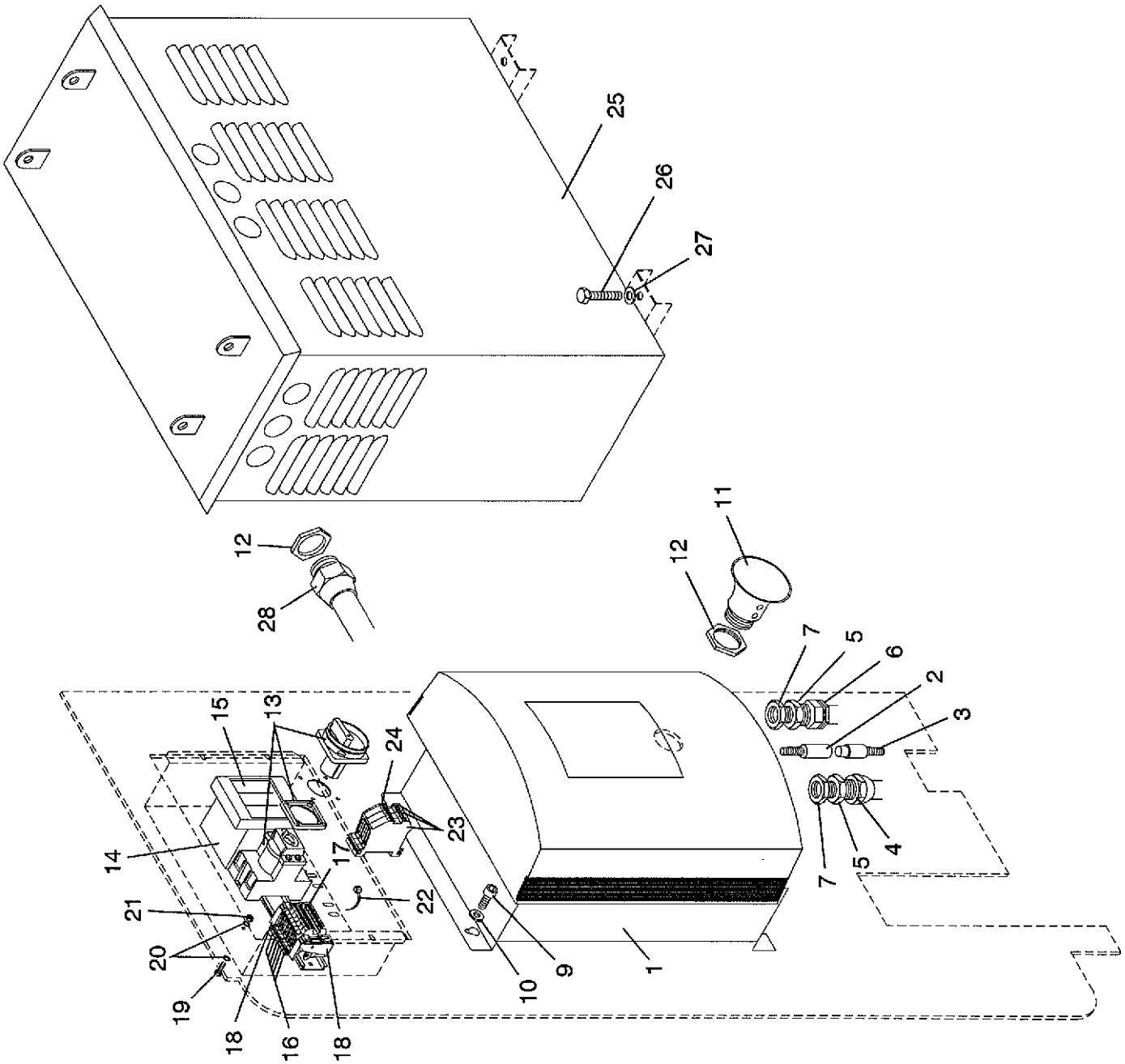
25
26
27
12
28
12
11
7
5
6
2
3
4
7
5
15
13
24
23
14
17
22
21
20
19
18
16
18
10
9
1

Nº	REF.	DENOMINATION	DENOMINACIÓN	DÉNOMINATION
1	286260	CONVERTER PS-80/1/2 M (FOR PS-80/1/2 M	CONVERTIDOR PS-80/1/2 M (PARA PS-80/1/2 M)	CONVERTISSEUR PS-80/1/2 M (POUR PS-80/1/2 M)
	286278	CONVERTER PS-80/3 (FOR PS-80/3) (EXCEPT FOR 440V)	CONVERTIDOR PS-80/3 (PARA PS-80/3) (EXCEPTO PARA 440V)	CONVERTISSEUR PS-80/3 (POUR PS-80/3) (SAUF POUR 440V)
	294884	CONVERTER PS-80/3 (FOR PS-80/3) (FOR 440V)	CONVERTIDOR PS-80/3 (PARA PS-80/3) (PARA 440V)	CONVERTISSEUR PS-80/3 (POUR PS-80/3) (POUR 440V)
2	305730	AIR FEMALE NPLUG	CONECTOR 7P HEMBRA AEREO	CONNECTEUR FEMELLE AERIEN
3	305722	AIR MALE CONECTOR	CONECTOR 7P MACHO AEREO	CONNECTEUR MALE AERIEN
4	140194	COUPLING PG-21 REF. 332104	RACOR PG-21 REF.332104	RACCORD PG-21 REF.332104
5	140400	REDUCER PG 29-21 (FOR PS-80/3)	REDUCTOR 292104 PG 29-21 (PARA PS-80/3)	REDUCTEUR PG 29-21 (POUR PS-80/3)
6	140137	STUFFING-BOX PG-21	PRENSAES.NORMADIX 602104 PG-21	PRESSE-ETOUPES PG-21
7	140269	COUNTERNUT PG-21 (FOR PS-80/1/2 M	TUERCA PG 282104 PG-21 (PARA PS-80/1/2 M)	CONTREECROU PG-21 (POUR PS-80/1/2 M)
	140277	COUNTERNUT PG-29 (FOR PS-80/3)	TUERCA PG 282904 PG-29 (PARA PS-80/3)	CONTREECROU PG-29 (POUR PS-80/3)
8	144337	ALLEN SCREW DIN912 M 6X15	TOR.ALLDIN912-8.8 B.TRI.M 6X15	VIS ALLEN DIN912 M 6X15
9	115733	WASHER 16X7X3	ARANDELA 16X7X3	RONDELLE 16X7X3
11	195487	STUFFING-BOX PG-29	PRENSAESTOPAS ABOCINADO PG-29	PRESSE-ETOUPES PG-29
12	140277	COUNTERNUT PG-29	TUERCA PG 282904 PG-29	CONTREECROU PG-29
13	300384	PAQUET.SWITCH 3LD1 518-0TB53 (FOR PS-80/1/2 M	INTERRUPT.GENERAL P3-63/V/SVB (PARA PS-80/1/2 M)	INTERRUPTEUR PAQUET.3LD1 518 (POUR PS-80/1/2 M)
	300392	PAQUET.SWITCH P3-100/V/SVB (FOR PS-80/3) (FOR PS-80/2 M-3)	INTERRUPT.GENERAL P3-100/V/SVB (PARA PS-80/3) (PARA PS-80/2 M-3)	INTERRUP.PAQUET P3-100/V/SVB (POUR PS-80/3) (POUR PS-80/2 M-3)
14	304881	FUSE DISCONECTOR	DESCONECT.FUSIBL.3NP4010-0CH01	DISCONECT.FUSIBLE
15	305987	FUSE 500V 25A (FOR PS-80/1/2 M (FOR PS-80/2 M-3)	CART.FUSIB.00 500V 25A 3NA3810 (PARA PS-80/1/2 M) (PARA PS-80/2 M-3)	CARTOUCHE FUSIBLE 500V 25A (POUR PS-80/1/2 M) (POUR PS-80/2 M-3)
	305979	FUSE 500V 50A (FOR PS-80/3) (FOR PS-80/2 M-3)	CART.FUSIB.00 500V 50A 3NA3820 (PARA PS-80/3) (PARA PS-80/2 M-3)	CARTOUCHE FUSIBLE 500V 50A (POUR PS-80/3) (POUR PS-80/2 M-3)
16	155457	TERMINAL BC 4/6 R 638255	BORNA CIAMA BC 4/6 R 638255	BORNE BC 4/6 R 638255
17	155275	END COVER FC2 5/10	TAPA FIN.CIAMA FC2.5/10 635455	COUVERCLE FINAL FC2.5/10
18	142331	FIXING CLAMP	TOPE FIJAC.S/BORDES R.LEG39400	BRIDE FIXATION

Nº	REF.	DENOMINATION	DENOMINACIÓN	DÉNOMINATION
19	146282	BICR.HEX SCREW DIN933-8 M 5X15	TOR.EX.DIN933-8.8 B.TRI.M 5X15	VIS HEX BICR.DIN933-8.8 M 5X15
20	149724	BICR EXT.TOOT.WASH.DIN6798 M5	ARAN.DEN.EXT.B.TRI.DIN6798M 5	RONDEL DEN.EX.BICR.DIN6798 M5
21	150177	BICR HEX NUT DIN934-8 M5	TUER.EX.DIN934-8 B.TRI.M 5	ECROU HEX DIN934-8 BIC.M5
22	140525	CLAMP 2244-0	BRIDA UNEX 2244-0	BRIDE 2244-0
23	162651	TERMINAL BC 16/25R 638555 (FOR 200,208,220 AND 240V)	BORNA CIAMA BC 16/25R 638555 (PARA 200,208,220 Y 240V)	BORNE BC 16/25R 638555 (POUR 200,208,220 ET 240V)
24	162669	END COVER FC 16/25 (FOR 200,208,220 AND 240V)	TAPA FIN.CIAMA FC 16/25 635655 (PARA 200,208,220 Y 240V)	COUVERCLE FINAL FC 16/25 (POUR 200,208,220 ET 240V)
25	306480	SELF-TRANSFORMER III IP21 25KV (FOR PS-80/1/2 M (FOR 200,208,220 AND 240V)	AUTOTRANSFORM.III IP21 25 KVA (PARA PS-80/1/2 M) (PARA 200,208,220 Y 240V)	AUTOTRANSFORMATEUR III IP21 25 (POUR PS-80/1/2 M) (POUR 200,208,220 ET 240V)
	306498	SELF-TRANSFORMER III IP21 40KV (FOR PS-80/3) (FOR PS-80/2 M-3) (FOR 200,208,220 AND 240V)	AUTOTRANSFORM.III IP21 40 KVA (PARA PS-80/3) (PARA PS-80/2 M-3) (PARA 200,208,220 Y 240V)	AUTOTRASFORMATEUR III IP21 40 (POUR PS-80/3) (POUR PS-80/2 M-3) (POUR 200,208,220 ET 240V)
26	186528	SCREW HEX 8G DIN933 M10X 50	TOR.EX.DIN933-8.8 B.TRI.M10X50	VIS HEX 8G DIN933 M10X 50
27	149500	BICR.WASHER B DIN125-ST 10,5	ARAN.B DIN125-ST B.TRI.10,5	RONDELLE B DIN125-ST BICR.10,5
28	100966	RACCORD PG-29	RACOR PG-29 REF.332904	RACCORD PG-29

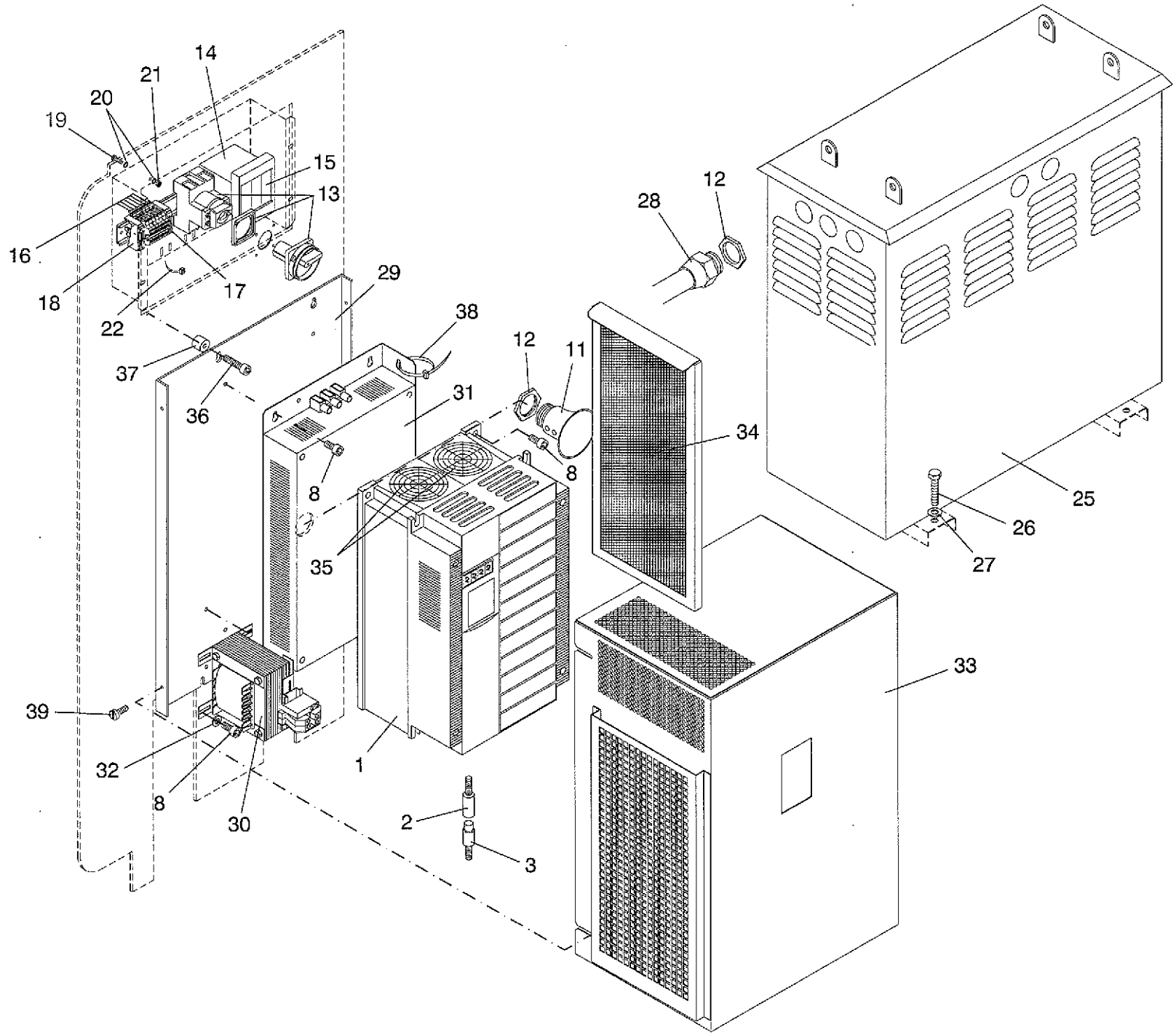

14
21
20
19
15
13
16
18
17
22
29
38
37
36
31
12
11
8
8
35
28
12
34
25
26
27
33
39
32
8
30
1
2
3

U.15565

Nº	REF.	DENOMINATION FROM MACHINE Nº 745.149	DENOMINACIÓN A PARTIR DE LA MÁQUINA Nº 745.149	DÉNOMINATION A PARTIR DE LA MACHINE Nº 745.149
1	405605	CONVERTER PAS-80/1/2 M (FOR PS-80/1/2 M	CONVERTIDOR PS-80/1/2 M (PARA PS-80/1/2 M)	CONVERTISEUR PS-80/1/2 M (POUR PS-80/1/2 M)
	405613	CONVERTER PS-80/3 (FOR PS-80/3) (FOR PS-80/2 M-3)	CONVERTIDOR PS-80/3 (PARA PS-80/3) (PARA PS-80/2 M-3)	CONVERTISEUR PS-80/3 (POUR PS-80/3) (POUR PS-80/2 M-3)
4	140194	CANCELLED	ANULADO	ANNULE
5	140400	CANCELLED	ANULADO	ANNULE
6	140137	CANCELLED	ANULADO	ANNULE
7	140269	CANCELLED	ANULADO	ANNULE
9	115733	CANCELLED	ANULADO	ANNULE
23	162651	CANCELLED	ANULADO	ANNULE
24	162669	CANCELLED	ANULADO	ANNULE
29	405761	CONVERTER BOX PLATE	PLACA CAJA CONVERTIDOR	PLAQUE BOITE CONVERTISEUR
30	318428	INDUCTANCE DCR003 (FOR PS-80/1/2 M	INDUCTANCIA DCR003 (PARA PS-80/1/2 M)	INDUCTANCE DCR003 (POUR PS-80/1/2 M)
	318451	INDUCTANCE DCR004 (FOR PS-80/3) (FOR PS-80/2 M-3)	INDUCTANCIA DCR004 (PARA PS-80/3) (PARA PS-80/2 M-3)	INDUCTANCE DCR004 (POUR PS-80/3) (POUR PS-80/2 M-3)
31	318436	FILTER TYPE EFL-15G11-4 (FOR PS-80/1/2 M	FILTRO TIPO EFL-15G11-4 (PARA PS-80/1/2 M)	FILTRE TP. EFL-15G11-4 (POUR PS-80/1/2 M)
	318444	FILTER TYPE EFL-22G11-4 (FOR PS-80/3) (FOR PS-80/2 M-3)	FILTRO TIPO EFL-22G11-4 (PARA PS-80/3) (PARA PS-80/2 M-3)	FILTRE TP. EFL-22G11-4 (POUR PS-80/3) (POUR PS-80/2 M-3)
32	149526	BICR.WASHER B DIN125-ST 6,4	ARAN.B DIN125-ST B.TRI. 6,4	RONDELLE B DIN125-ST BICR.6,4
33	405803	CONVERTER BOX	CAJA CONVERTIDOR	BOITE CONVERTISEUR
34	408575	CONVERTER BOX FILTER	FILTRO CAJA CONVERTIDOR	FILTRE BOITE CONVERTISEUR
35	332353	FAN G11-FANT7,5 (5,5-22 KW)	VENT. G11-FAN7,5 (5,5-22 KW)	VENTILATEUR G11-FAN7,5 (5,5-22
36	302331	ALLEN SCREW DIN912-8.8 BICR.	TOR.ALLDIN912-8.8 B.TRI.M 6X35	VIS ALLDIN912-8.8 BICR.M6X35
37	261370	SEPARATOR 20X 7X16,5	SEPARADOR 20X 7X16,5	SEPARATEUR 20X 7X16,5
38	140525	CLAMP 2244-0	BRIDA UNEX 2244-0	BRIDE 2244-0
39	146126	BICR CYL SCREW DIN84-4 M-5X15	TOR.CIL.DIN84-4.8 B.TRI.M 5X15	VIS CYL BICR DIN84-4.8 M-5X15

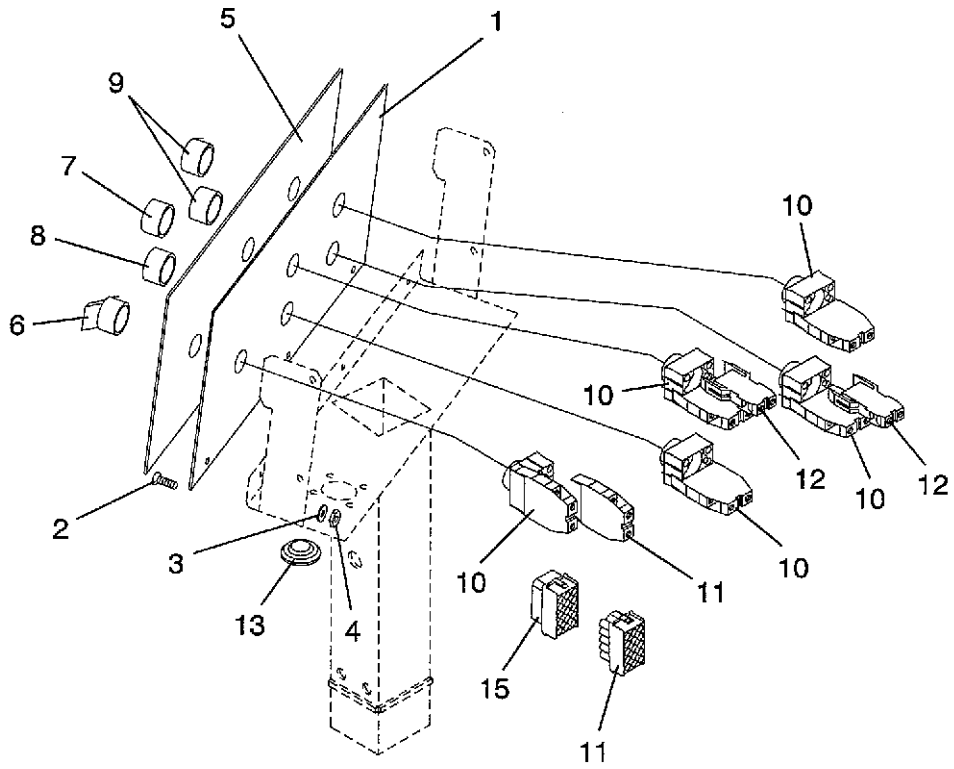

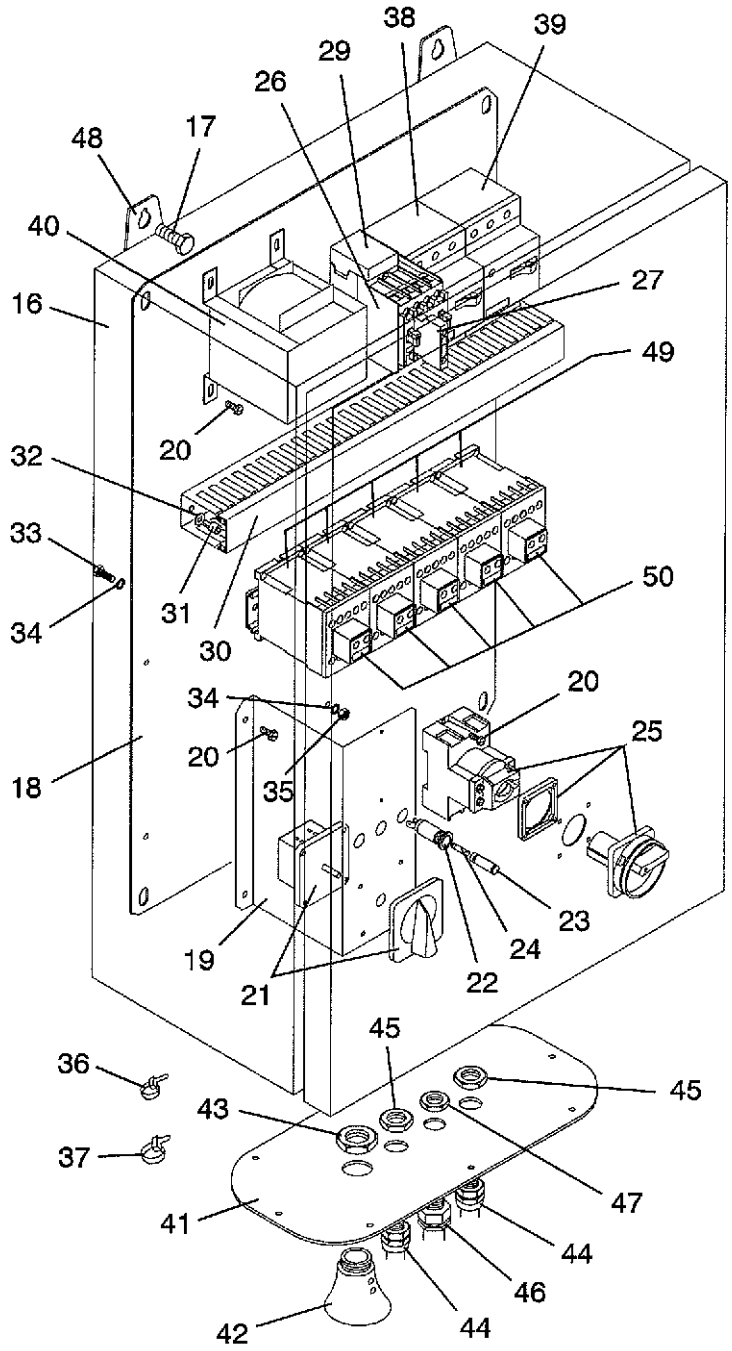

U.13281

PS-80 (13)

Nº	REF.	DENOMINATION	DENOMINACIÓN		DÉNOMINATION
1	289256	CONTROL BOX FRONT	FRONTAL CAJA MANDOS		FRONTAL BOITE COMMANDES
2	302604	BICR.SCREW DIN963-4.8 M 4X 20	TOR.AV.DIN963-4.8 B.TRI.M 4X20		VIS T/FRAIS.DIN963-4.B.M 4X 20
3	149732	BICR.EXT TOOT.WASH DIN6798 M4	ARAN.DEN.EXT.B.TRI.DIN6798M 4		RONDEL.DEN.EX.BICR.DIN6798 M4
4	150185	BICR.HEX.NUT DIN934-8 M4	TUER.EX.DIN934-8 B.TRI.M 4		ECROU HEX.DIN934-8 BICR.M4
5	306324	CONTROL PANEL PLATE	PLACA PANEL DE MANDOS		PLAQUE PANNEAU DE COMMANDES
6	189761	DRIVE 3SB10 00-2DC01	MULETILLA 3SB10 00-2DC01		ACTIONNEMENT 3SB10 00-2DC01
7	306191	PUSH-BUTTON	PULSADOR 3SB10 00-OAG0(341669)		PULSATEUR
8	306183	PUSH-BOTTON	PULSADOR 3SB10 00-OAB01		PULSATEUR
9	306175	PUSH-BOTTON	PULSADOR 3SB10 01-OAF0		PULSATEUR
10	197343	CONNECTION ELEMENT 3SB13 20-0A	ELEMENTO CONEXION 3SB13 20-0A		ELEMENT CONNEXION 3SB13 20-0A
11	300277	CONECTION ELEMENT 3SB14 00-0A	ELEMENTO CONEXION 3SB14 00-0A		ELEMENT CONNEXION 3SB14 00-0A
12	306209	CONNECTION ELEMENT	ELEMENTO CONEXION SB14(341669)		ELEMENT CONNEXION
13	181701	LEGRAND CONE 91911	CONO LEGRAND 91911		CONE LEGRAND 91911
14	189878	PROTECTOR 1/480711-0	PROTECTOR 1/480711-0		PROTECTEUR 1/480711-0
15	189886	PROTECTOR 1/480710-0	PROTECTOR 1/480710-0		PROTECTEUR 1/480710-0
16	287375	INSTALLATION BOX	CAJA INSTALACION		BOITE INSTALLATION
17	144378	ALLEN SCREW DIN912 M-8X15	TOR.ALLDIN912-8.8 B.TRI.M 8X15		VIS ALLEN DIN912 M-8X15
18	286831	INSTALLATION BOX PLATE	PLACA CAJA INSTALACION		PLAQUE BOITE INSTALLATION
19	287367	SECTIONAT.BRACKET	SOPORTE SECCIONADOR		SUPPORT SECTIONATEUR
20	183400	CYL.PLATE SCREW ST-4 20 C/AL	TOR.CHAPA ST-4 20 C/AL.T25		VIS PLAQUE CYL.ST-4 20 C/AL
21	137893	COMMUTATOR P-671 16A SERIES P5	CONMUTADOR P-671 16A SERIE P5		COMMUTATEUR P-671 16A SERIE P5
22	160119	FUSE HOLDER REF.FEC 031 1631	PORTAFUSIBLES REF.FEC.031.1631		PORTE-FUSIBLE REF.FEC 031 1631
23	137661	BAYONET HEAD	CABEZA BAYONETA FEK.031.1613		TETE BAYONETTE
24	182485	FUSE FST 0034.5225 1A	CART.FUSIB.FST 0034.5225 1 A		CARTOUCHE FUS.FST 0034.5225 1A
25	198861	GRAL.SWITCH P1-25/V/SVB	INTERRUPT.GENERAL P1-25/V/SVB		INTERRUPTEUR GRAL.P1-25/V/SVB
26	193441	CONTACTOR 3TF30 01-OAN2	CONTACTOR 3TF30 01-OAN2	ZZ	CONTACTEUR 3TF30 01-OAN2
	194050	COIL 3TY7 403-OAN2	BOBINA 3TY7 403-OAN2	ZZ	BOBINE 3TY7 403-OAN2
27	193458	AUX. CONTACT BLOCK 3TX4010-2A	BLOQUE CONTAC.AUX.3TX4010-2	ZZ	BLOC CONTACT AUX. 3TX4010-2A
28	148627	CONNECTION DELAYER	RETARDADOR CONEX.3TX4180-OA	ZZ	RETARDATEUR DE RACCORDEMENT
29	181396	DELAYER 7PX70 40-1CN20	RETARDA.SIEMENS 7PX70 40-1CN20		RETARDATEUR 7PX70 40-1CN20

Nº	REF.	DENOMINATION	DENOMINACIÓN	DÉNOMINATION
30	286864	WIRE-STOP DUCT3	CANAL PASACABLES	CHANEL PASSACABLES
31	151878	RIVET POP TLP/D/636/BS4,8X 9,1	REMA.POP TLP/D/636/BS 4,8X 9,1	RIVET TLP/D/636/BS 4,8X 9,1
32	149534	BICR.WASHER B DIN125-ST 5,3	ARAN.B DIN125-ST B.TRI. 5,3	RONDELLE B BICR.DIN125-ST 5,3
33	146290	BICR.HEX SCREW DIN933-8 M-5X20	TOR.EX.DIN933-8.8 B.TRI.M 5X20	VIS HEX BICR.DIN933-8.8 M-5X20
34	149724	BICR EXT.TOOT.WASH.DIN6798 M5	ARAN.DEN.EXT.B.TRI.DIN6798M 5	RONDEL DEN.EX.BICR.DIN6798 M5
35	150177	BICR HEX NUT DIN934-8 M5	TUER.EX.DIN934-8 B.TRI.M 5	ECROU HEX DIN934-8 BIC.M5
36	140434	CLAMP 2221	BRIDA UNEX 2221	BRIDE 2221
37	140525	CLAMP 2244-0	BRIDA UNEX 2244-0	BRIDE 2244-0
38	138172	AUTOMAT. SWITCH 3VU13 00-1MJ00 (FOR 380V)	INTERRUPTOR AUT.3VU1300-1MJ ZZ (PARA 380V)	INTERRUPTEUR AU.3VU13 00-1MJ00 (POUR 380V)
	138198	AUTOMAT. SWITCH 3VU13 00-1MK00 (FOR 208 AND 220V)	INTERRUPTOR AUT.3VU1300-1MK ZZ (PARA 208 Y 220V)	INTERRUPTEUR AU.3VU13 00-1MK00 (POUR 208 ET 220V)
39	175208	AUTOMAT.SWITCH 3VU13 00-1ML00 (FOR 380V)	INTERRUPTOR AUT.3VU13 00-1ML00 (PARA 380V)	INTERRUPTEUR AUT.3VU13 00-1ML0 (POUR 380V)
	148502	AUT.SWITCH 3VU13 00-1MM00 (FOR 208 AND 220V)	INTERRUPTOR AUT.3VU1300-1MM ZZ (PARA 208 Y 220V)	INTERRUPTEUR AUT.3VU13 (POUR 208 ET 220V)
40	300756	TRANSFORMER IP00 100 VA (FOR 220 AND 380V)	TRANSFORMADOR IP00 100 VA (PARA 220 Y 380V)	TRANSFORMATEUR IP00 100 VA (POUR 220 ET 380V)
	300764	TRANSFORMER IP00 100 VA (FOR 208V)	TRANSFORMADOR IP00 100 VA (PARA 208V)	TRANSFORMATEUR IP00 100 VA (POUR 208V)
41	286856	INSTALLATION BOX COVER	TAPA CAJA INSTALACION	COUVERCLE BOITE INSTALLATION
42	191965	STUFFING-BOX PG16	PRENSAESTOPAS ABOCINADO PG-16	PRESSE-ETOUPES PG-16
43	140251	COUNTERNUT PG-16	TUERCA PG 281604 PG-16	CONTREECROU PG-16
44	140178	RACCORD PG-13 REF.331304	RACOR PG-13 REF.331304	RACCORD PG-13 REF.331304
46	140103	STUFFING-BOX PG-11	PRENSAES.NORMADIX 601104 PG-11	PRESSE-ETOUPES PG-11
47	140236	COUNTERNUT PG-11	TUERCA PG 281104 PG-11	CONTREECROU PG-11
48	306167	PANEL FIXATION ASSEMBLY	CONJUNTO FIJACION MURAL PFCR	ENSEMBLE FIXATION PANNEAU

N°	REF.	DENOMINATION FROM MACHINE N° 745.246	DENOMINACIÓN A PARTIR DE LA MÁQUINA N° 745.246	DÉNOMINATION A PARTIR DE LA MACHINE N° 745.246
26	320846	CONTACTOR 3RT10 24-1AL2	CONTACTOR 3RT10 24-1AL2	CONTACTEUR 3RT10 24-1AL2
	321240	COIL 3RT1924-5AL21 230-50/60	BOBINA 3RT1924-5AL21 230-50/60	BOBINE 3RT1924-5AL21 230-50/60
27	311696	AUX.CONTACT BLOCK3RH1921-1CA01	BLOQUE CONTAC.AUX3RH1921-1CA01	BLOC CONTACT AUX.3RH1921-1CA01
28	148627	CONNECTION DELAYER	RETARDADOR CONEX.3TX4180-OA ZZ	RETARDATEUR DE RACCORDEMENT
29	326389	CONNECTION DELAYER S. 3RT19 26	RETARDA.SIEMENS 3RT19 26-2CH21	RETARDATEUR S.3RT19 26-2CH21
38	326215	AUT.SWITCH 3RV10 11-1EA1.0	INTERRUPT.AUT.3RV10 11-1EA1.0	INTERRUPTEUR AUT.3RV10 11-1EA1
	326256	AUT.SWITCH 3RV10 11-1GA1.0	INTERRUPT.AUT.3RV10 11-1GA1.0	INTERRUPTEUR AUT 3RV10 11-1GA1
39	326355	AUT.SWITCH 3RV10 11-1JA1.0	INTERRUPT.AUT.3RV10 11-1JA10	INTERRUPTEUR AUT.3RV10 11-1JA1
	326249	AUT.SWITCH 3RV10 21-4AA1.0	INTERRUPT.AUT.3RV10 21-4AA1.0	INTERRUPTEUR AUT.3RV10 21-4AA1
49	326199	CONTACTOR 3RT10 16-1AP02	CONTACTOR 3RT10 16-1AP02	CONTACTEUR 3RT10 16-1AP02
50	326298	AUX.CONTACT BLOCK3RH1911-1AA10	BLOQUE CONTAC.AUX3RH1911-1AA10	BLOC CONTACT AUX.3RH1911-1AA10

ACJ SYSTEMS, S.L. es una empresa joven, din□mica y en proceso de expansi□, creada en el a□ 2000 y dedicada al mundo de la lavandería industrial, con el objetivo de convertirse en un fiel proveedor del profesional que d□a tras d□a est□trabajando en este sector.

La clave de nuestro □ito consiste en apostar por la calidad, la innovaci□, la agilidad en las entregas y en ofrecer soluciones a nuestros clientes.

Compra-venta de m□quinas de lavander□ de segunda mano: en nuestras instalaciones las reparamos y acondicionamos para ser vendidas en perfectas condiciones y hacemos la puesta en marcha en casa del cliente.
Reparaci□ de m□quinas, ya sea en nuestras instalaciones o en las de nuestros clientes.
Suministro de materiales y piezas de recambio para cualquier m□quina de lavander□ industrial.
Mantenimiento de lavander□s.

www.acjsystems.com

ACJ SYSTEMS, S.L. | C.Osona,10 Tona-Barcelona 08551 | T.+34 93 812 49 41 | acj@acjsystems.com