Despieces

DESPIECE SECADORA ADC FASE 7 sti12

GIRBAU, S.A.

STI-12 Phase 7
Parts Manual

Girbau, S.A.®
Carretera Manlleu, KM
Vic, Barcelona, Spain
54380

011404MGOLDSTEIN/gbennett

Part No. 450256

Retain This Manual In A Safe Place For Future Reference

This product embodies advanced concepts in engineering, design, and safety. If this product is properly maintained, it will provide many years of safe, efficient, and trouble-free operation.

ONLY qualified technicians should service this equipment.

OBSERVE ALL SAFETY PRECAUTIONS displayed on the equipment or specified in the installation manual included with the dryer.

The following "**FOR YOUR SAFETY**" caution **must be** posted near the dryer in a prominent location.

FOR YOUR SAFETY	POUR VOTRE SÉCURITÉ
Do not store or use gasoline or other flammable vapors and liquids in the vicinity of this or any other appliance.	Ne pas entreposer ni utiliser d'essence ni d'autres vapeurs ou liquides inflammables à proximité de cet appareil ou de tout autre appareil.

We have tried to make this manual as complete as possible and hope you will find it useful. The manufacturer reserves the right to make changes from time to time, without notice or obligation, in prices, specifications, colors, and material, and to change or discontinue models.

Important

For your convenience, log the following information:

DATE OF PURCHASE _____ **MODEL NO.** **STI-12 Phase 7**

DISTRIBUTOR'S NAME _____

Serial Number(s) _____

_____

_____

Replacement parts can be obtained from your distributor or **Girbau, S.A.** When ordering replacement parts from the factory, you can FAX your order to **Girbau, S.A.** at 3493-886-0785 or telephone your order directly to the **Girbau, S.A.** Parts Department at 3493-886-1100. Please specify the dryer **model number** and **serial number** in addition to the **description** and **part number**, so that your order is processed accurately and promptly.

The illustrations on the following pages may not depict your particular dryer exactly. The illustrations are a composite of the various dryer models. Be sure to check the descriptions of the parts thoroughly before ordering.

"IMPORTANT NOTE TO PURCHASER"

Information **must be** obtained from your local gas supplier on the instructions to be followed if the user smells gas. These instructions **must be** posted in a prominent location near the dryer.

Table of Contents

Non-Coin Control Door Assembly 3

Coin Control Door Assembly 4

Phase 7 Non-Coin Microprocessor Control Panel Assembly 5

Phase 7 Coin Microprocessor Control Panel Assembly 6

Coin Vault Assembly 7

Coin/Non-Coin Front Panel Assembly 8

Main Door "Steel" Assembly 9

Main Door Switch Assembly 10

Basket (Tumbler)/Support Assemblies 11

Sensor Bracket Assembly 12

Drop Lint Door Assembly 13

Lint Trap Assembly 14

Idler Bearing Assembly 15

Basket (Tumbler) Bearing Assembly 16, 17

Non-Reversing Motor Mount Assembly 18, 19

Reversing T.E.F.C. Motor Mount Assembly 20, 21

Direct Spark Ignition (DSI) Burner Assembly 22, 23

Electric Oven Assembly 24, 25

Single-Phase (1ø) Motor/Electric Relay Panel Assembly 26

3-Phase (3ø) Motor/Electric Relay Panel Assembly 27

Steam Coil/Air-Operated Steam Damper Assembly 28, 29

Fire Suppression System (F.S.S.) Piping Assembly 30

Fire Suppression System (F.S.S.) Sensor Probe Assembly 31

Outer Top/Back Guard Assemblies 32

Electrical Oven Component Application Chart 33

Additional Parts Available 34

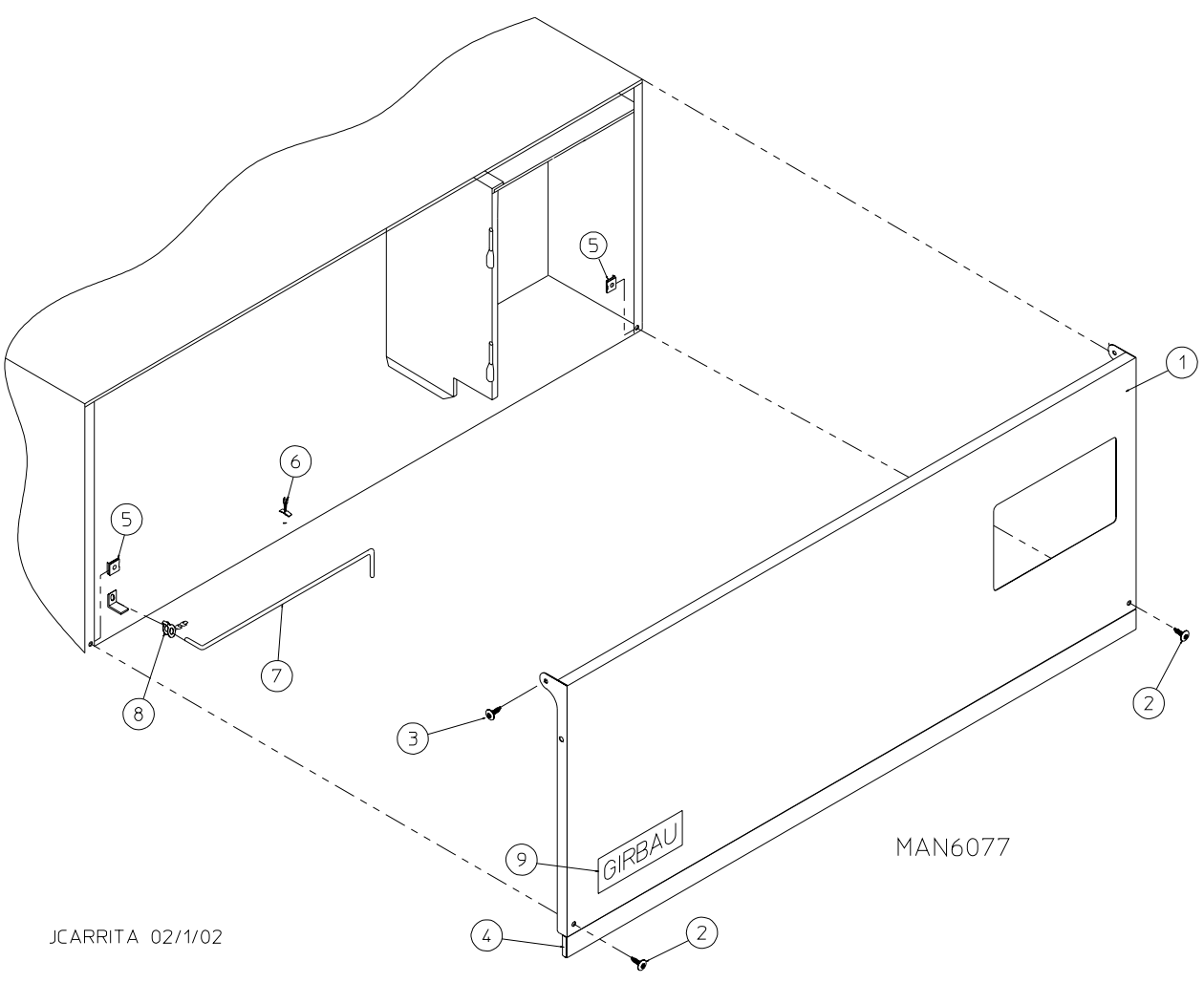

Illus. No.	Part No.	Qty.	Description
1	884098	1	White Control Door Assembly
2	150217	2	#10-32 x 3/4" Phillips Pan Head Machine Screw
3	150317	2	#10-16 x 3/4" TORX Plus BTN Type 1
	150318	1	25 IP TORX Plus Bit (for removal of TORX head screw)
4	117604	6	Neoprene Sponge Tape (sold by the foot)
5	154011	2	#10-32 Multi-Thread U-Nut
6	102603	1	Control Door Rod Catch
7	102502	1	Control Door Support Rod
8	102601	1	Control Door Rod Retainer Clip
9	112371	1	Girbau Logo

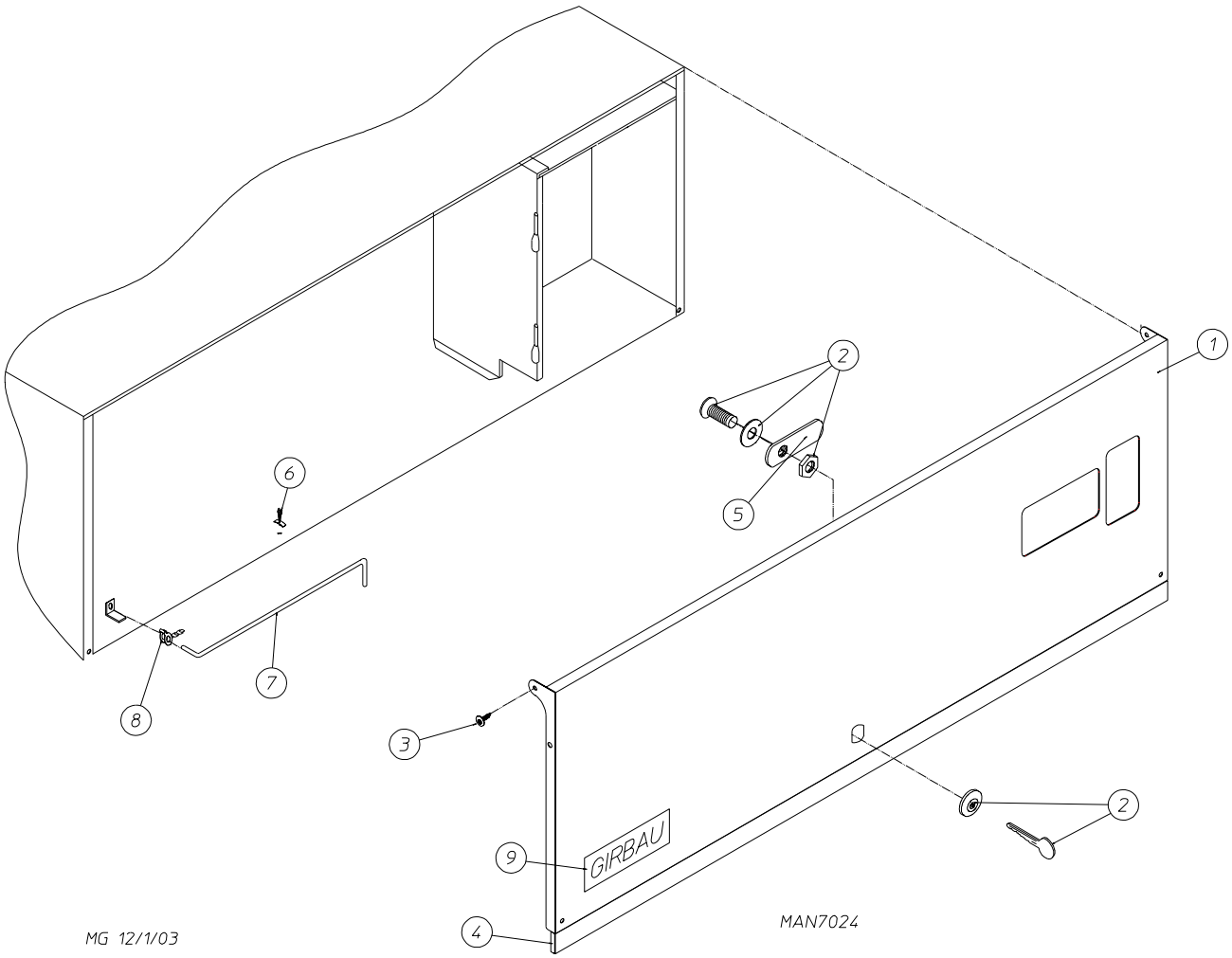

Illus. No.	Part No.	Qty.	Description
1	884099	1	White Control Door Assembly (includes illus. nos. 1 through 4)
2	160015	1	High Security Lock with Key
	160104	1	MK-100 Key ONLY
3	150317	2	#10-16 x 3/4" TORX Plus BTN Type 1
	150318	1	25 IP TORX Plus Bit (for removal of TORX head screw)
4	117604	6	Neoprene Sponge Tape (sold by the foot)
5	160032	1	1" Straight Cam
6	102603	1	Control Door Rod Catch
7	102502	1	Control Door Support Rod
8	102601	1	Control Door Rod Retainer Clip
9	112371	1	Girbau Logo

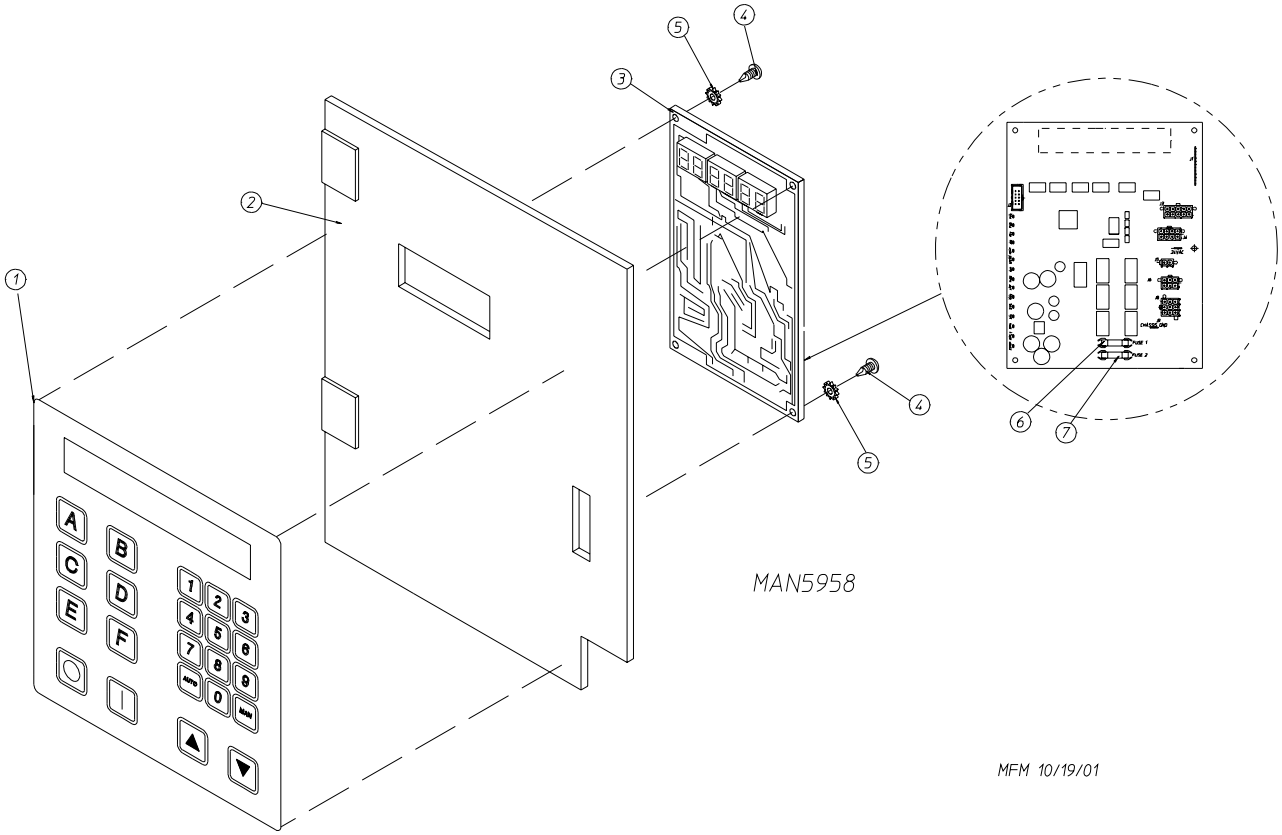

Illus. No.	Part No.	Qty.	Description
1	112571	1	Phase 7 Non-Coin Keyboard
2	850984	1	Phase 7 Non-Coin Microprocessor Controller (computer) Panel ONLY
	887001	1	Phase 7 Non-Coin Microprocessor Controller (computer) Panel ONLY with Fire Suppression System (F.S.S.) (for models mfg. prior to December 31, 2003)
3	887004	1	Phase 7 Non-Coin Microprocessor Controller (computer) ONLY with F.S.S. (for models mfg. as of January 1, 2004)
4	150005	2	#6-32 x 3/4" Phillips Round Head Machine Screw
5	153010	2	#6 Internal/External Star Washer
6	136016	1	5-amp Fuse
7	136097	1	500-mA Fuse

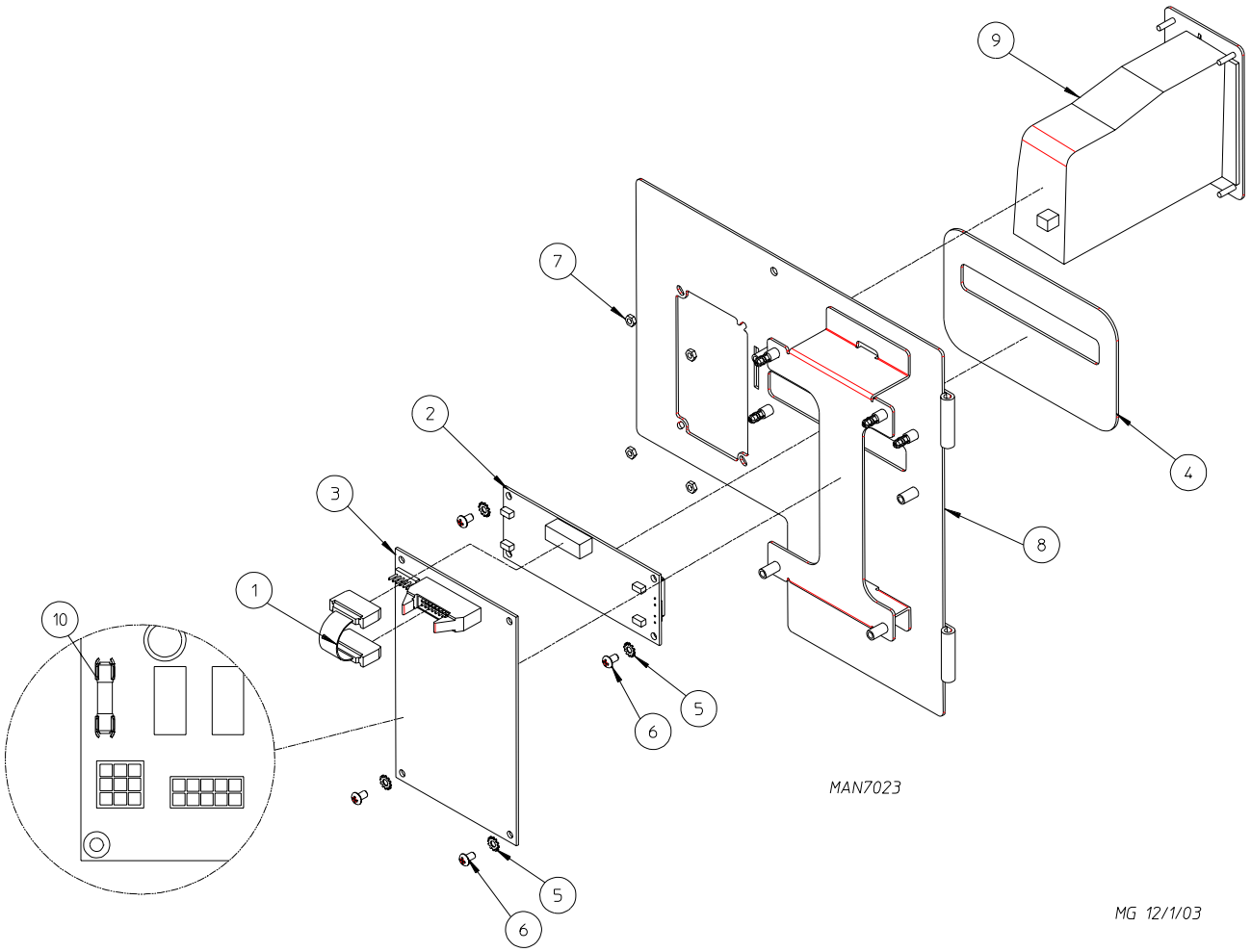

Illus. No.	Part No.	Qty.	Description
1	137250	1	Phase 7 Coin Ribbon Cable
2	137270	1	16” x 1” Large Character Display
3	887007	1	Phase 7 Coin Board (with no Fire Suppression System [F.S.S.]) (for models mfg. prior to February 1, 2004)
	887011	1	Phase 7 Coin Board (with no F.S.S.) (for models mfg. as of February 1, 2004)
	887010	1	Phase 7 Coin Board (with F.S.S.) (for models mfg. prior to February 1, 2004)
	887013	1	Phase 7 Coin Board (with F.S.S.) (for models mfg. as of February 1, 2004)
4	112575	1	Phase 7 Control Panel
5	153010	1	#6 Internal/External Star Washer
6	150005	4	#6-32 x 1/4” Phillips Round Head Machine Screw
7	152102	1	M3 Metric Hex Nut
8	824363	1	Phase 7 Coin Control Panel
9	830159	1	Phase 7 Programmable Euro/Coin Acceptor Assembly
10	136111	1	5-amp Fuse

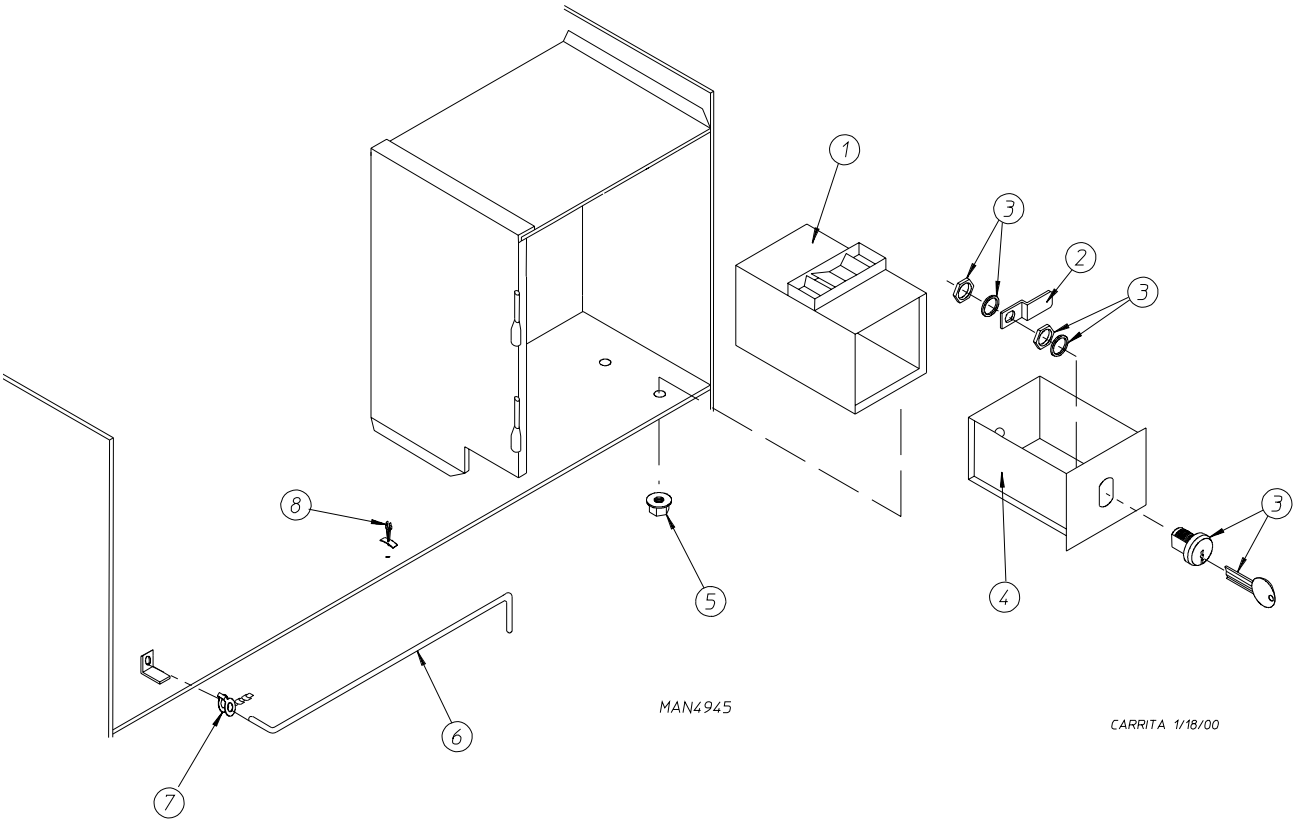

Illus. No.	Part No.	Qty.	Description
1	802112	1	Microprocessor Coin Vault Assembly Complete (includes illus. nos. 1 through 5)
	802117	1	Microprocessor Coin Vault ONLY
2	160028	1	Cam for 1/4 Turn Lock ONLY
3	875061	1	1/4 Turn Lock with Key and Cam
	160105*	1	1/4 Turn Mer-Pel Key ONLY
4	802020	1	1/4 Turn Coin Box Assembly (includes illus. nos. 2 through 4)
5	152014	4	1/4-20 Free Spin Wash Nut
6	102502	1	Control Door Support Rod
7	102601	1	Control Door Rod Retainer Clip
8	102603	1	Control Door Rod Catch

* Specify key number when ordering.

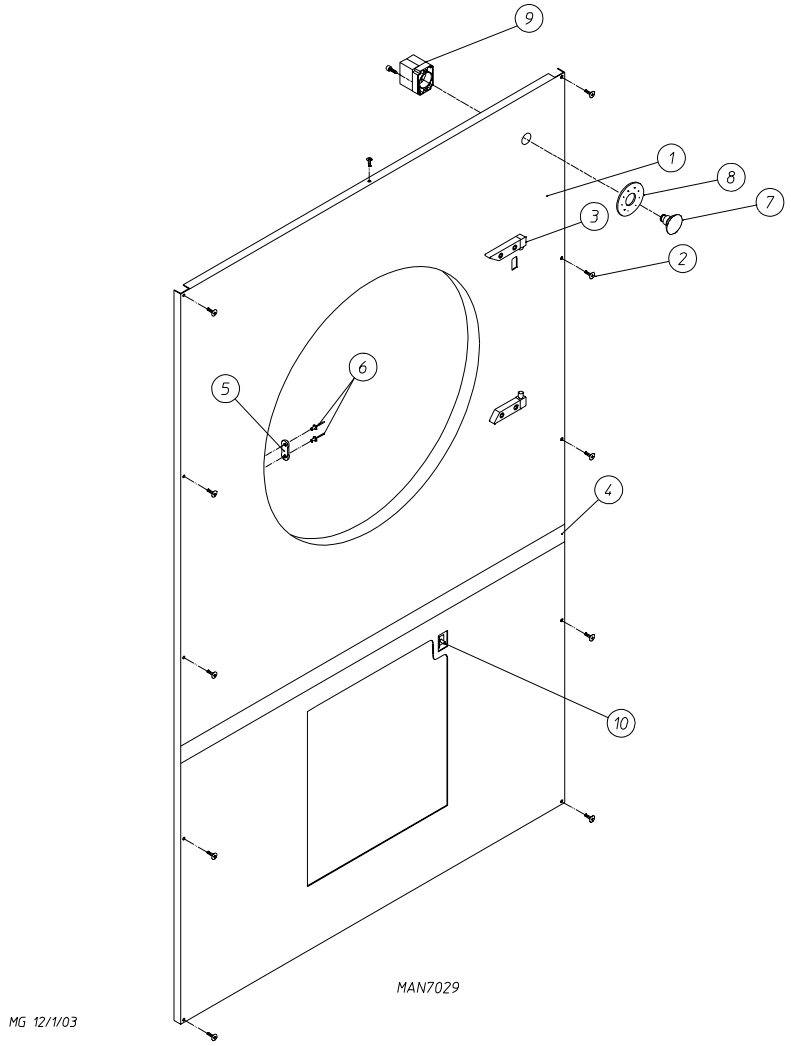

Illus. No.	Part No.	Qty.	Description
1	883630	1	White Front Panel Assembly with Emergency Stop (E-Stop) (includes illus. nos. 1, 4, 5, and 6)
	883652	1	White Front Panel Assembly (includes illus. nos. 1, 4, 5, and 6)
2	150313	11	#10-16 x 1/2" TORX Plus BTN Type 1 Screw
	150318	1	25 IP TORX Plus Bit (for removal of TORX head screw)
3	--------	1	Main Door Hinge (refer to **Main Door "Steel" Assembly** on **page 9**)
4	882970	1	Front Panel Trim Assembly
5	881987	1	Friction Door Latch (includes illus. nos. 5 and 6)
6	154215	2	5/32" Pop Rivet
7	123500*	1	Emergency Stop (E-Stop) Push/Pull Button
8	123506*	1	Emergency Stop (E-Stop) Nameplate
9	123520*	1	Normally Open/Normally Closed (NO/NC) Contact Block with Mounting Latch
10	122002	1	Arcolectric Door Switch

* Non-coin only.

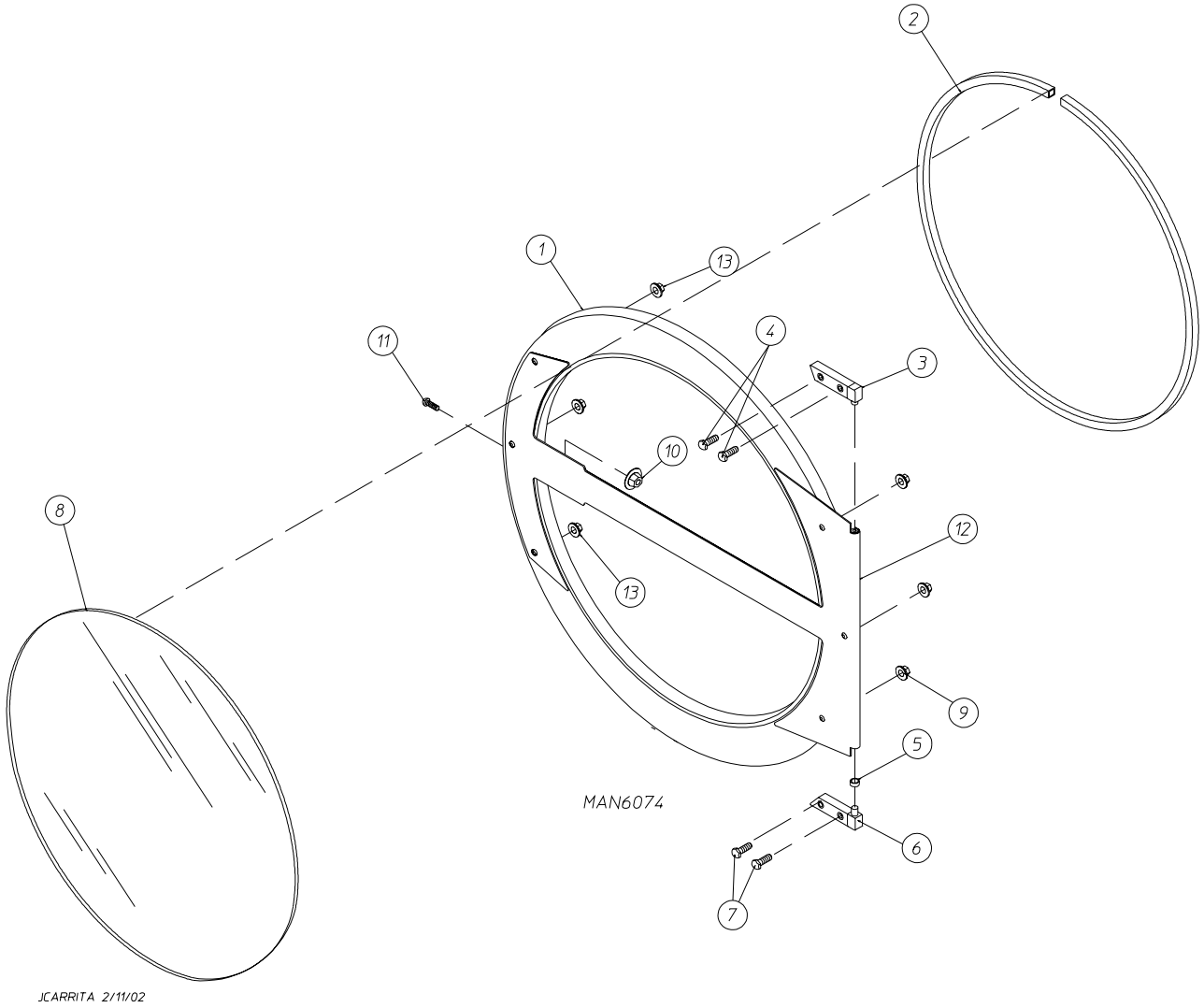

Illus. No.	Part No.	Qty.	Description
1	883274	1	White Main Door Assembly Complete (includes illus. nos. 1, 2, and 8 through 13)
2	102354	1	Door Gasket
	170730	1	Clear Gasket Adhesive (10.7 oz. cartridge)
3	881440	1	White Top Hinge Block Assembly (includes illus. nos. 3 and 4)
4	150445	2	1/4-20 x 3/4" Black Cap Head Setscrew
5	153031	1	1/4" Nylon Washer
6	881441	1	White Bottom Hinge Block Assembly (includes illus. nos. 5, 6, and 7)
7	150445	2	1/4-20 x 3/4" Black Cap Head Setscrew
8	102211	1	20-7/16" Door Glass
	170730	1	Clear Glass Adhesive (10.3 oz. cartridge)
9	881806	3	1/4-20 Free Spin Wash Nut (white)
10	151009	1	#10-32 Black Hex Acorn Nut
11	150120	1	Door Latch Screw
12	883275	1	White Small Cold Rolled Steel (CRS) Door Handle
13	881806	3	1/4-20 Free Spin Wash Nut (white)

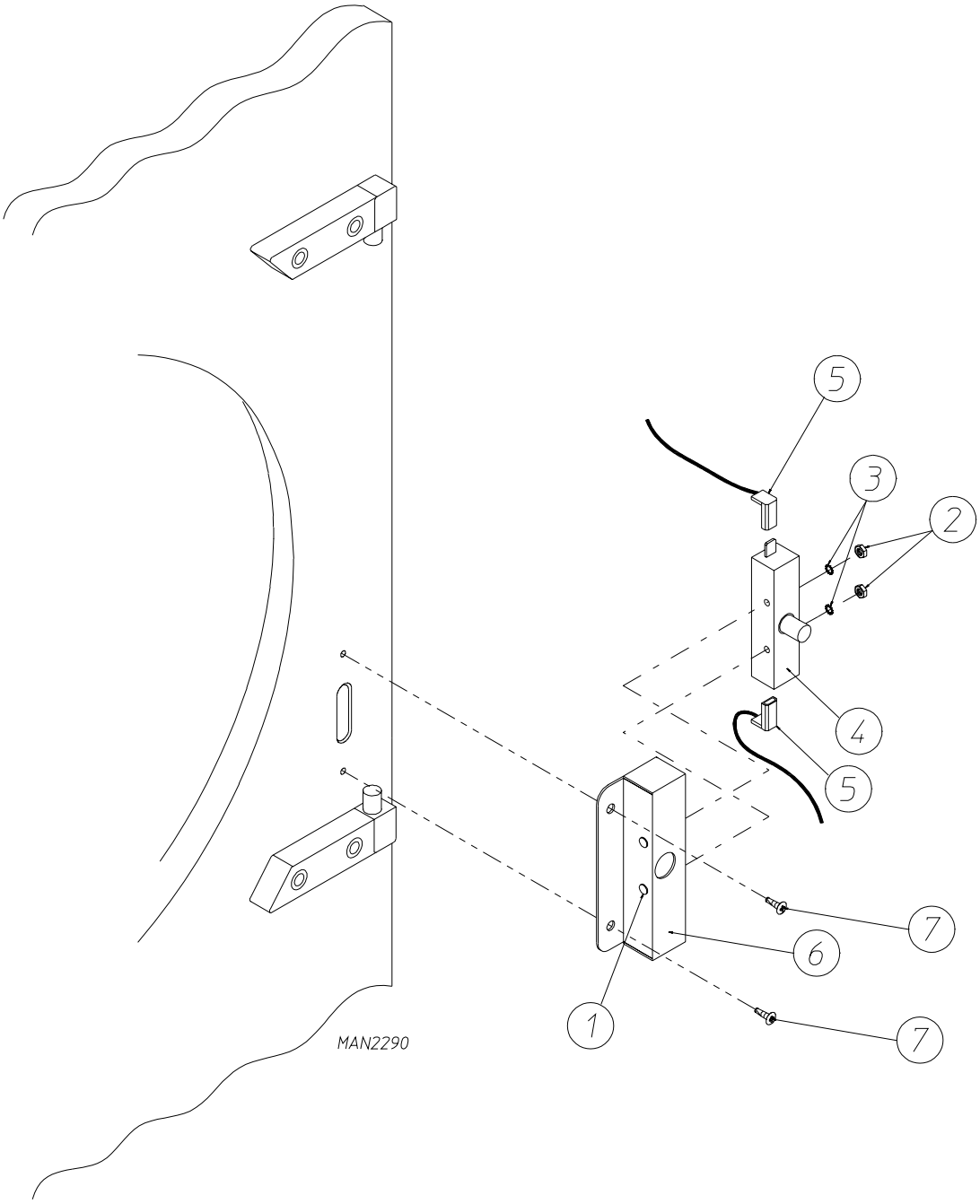

Illus. No.	Part No.	Qty.	Description
1	150006	2	#6-32 x 7/8” Phillips Pan Head Machine Screw
2	152013	2	#6-32 Hex Nut
3	153010	2	#6 Internal/External Star Washer
4	137005	1	Door Switch
5	122636	2	Flag Terminal
6	881213	1	White Main Door Switch Housing ONLY
	881216	1	White Main Door Switch Housing Complete (includes illus. nos. 1 through 4 and 6)
7	150201	2	#10-32 x 1/4” Phillips Pan Head Tap Screw

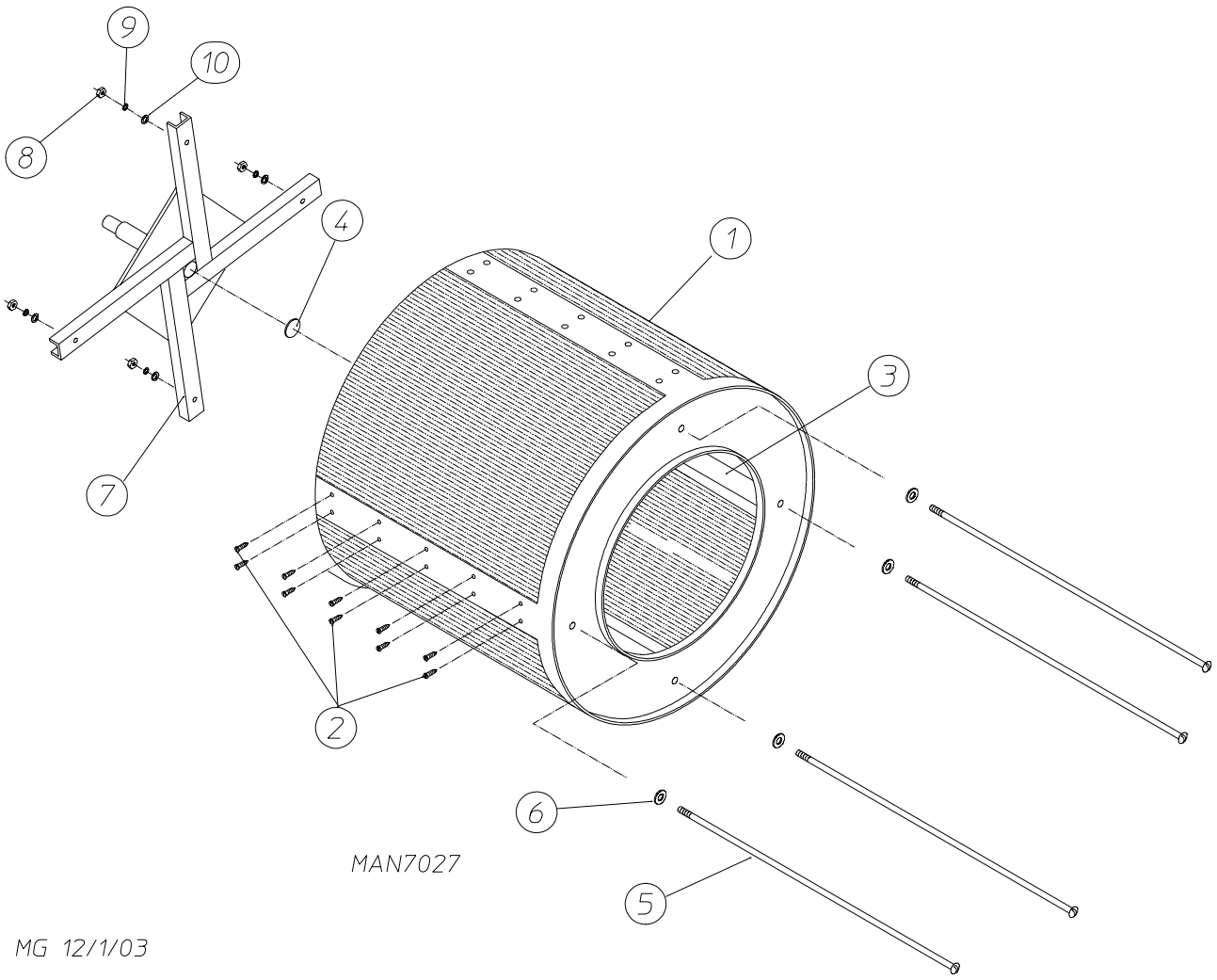

Illus. No.	Part No.	Qty.	Description
1	817053	1	Stainless Steel Basket (tumbler) ONLY (without felt collar)
	882523	1	Basket (tumbler)/Support Assemblies (includes illus. nos. 1 through 10)
2	150313	40	#10-16 x 1/2" TORX Plus BTN Type 1 Screw
3	322066	2	Basket (tumbler) Rib ONLY
	322067	2	Tapered Basket (tumbler) Rib ONLY
4	115986	1	Felt (tumbler) Pad 1/4" x 2" Diameter
5	100918	4	3/8-16 x 26-3/4" Tie Rod
6	153004	4	3/8" Flat Washer
7	882517	1	Basket (tumbler) Support ONLY
8	152027	4	3/8-16 Nylon Insert Lock Nut
9	153005	4	3/8" Lock Washer
10	153004	4	3/8" Flat Washer

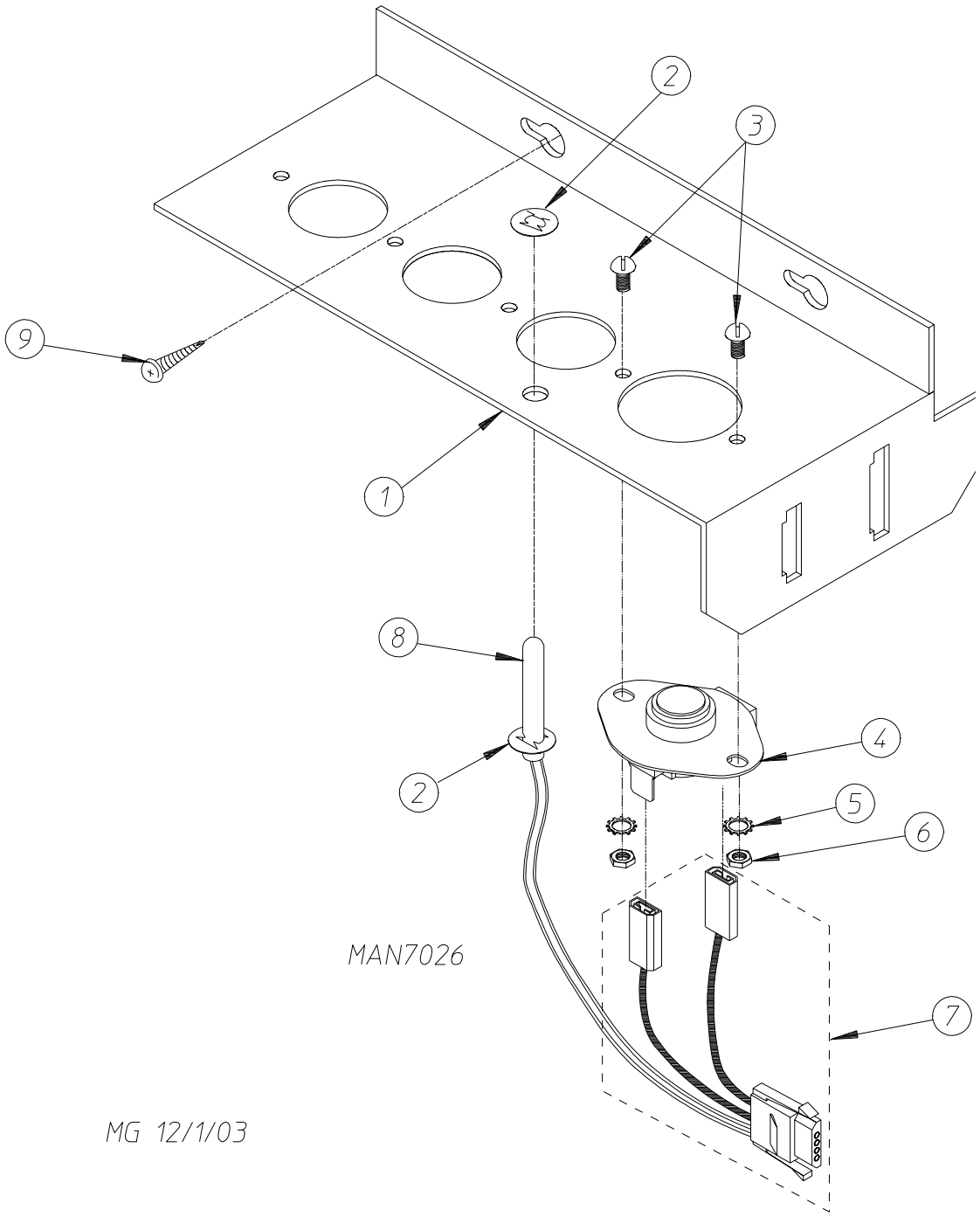

Illus. No.	Part No.	Qty.	Description
1	305007	1	Universal Sensor Bracket
2	154007	2	1/4” Tinnerman Push On Fastener
3	150005	2	#6-32 x 1/4” Phillips Round Head Machine Screw
4	130103	1	L225° Temperature Sensor (automatic reset)
5	153010	2	#6 Internal/External Star Washer
6	152000	2	#6-32 Hex Nut
7	824999	1	Temperature Sensor Harness
8	137014	1	1-1/4” Temperature Sensor Probe
9	150301	2	#8-18 x 7/16” Phillips Pan Head TEK Screw

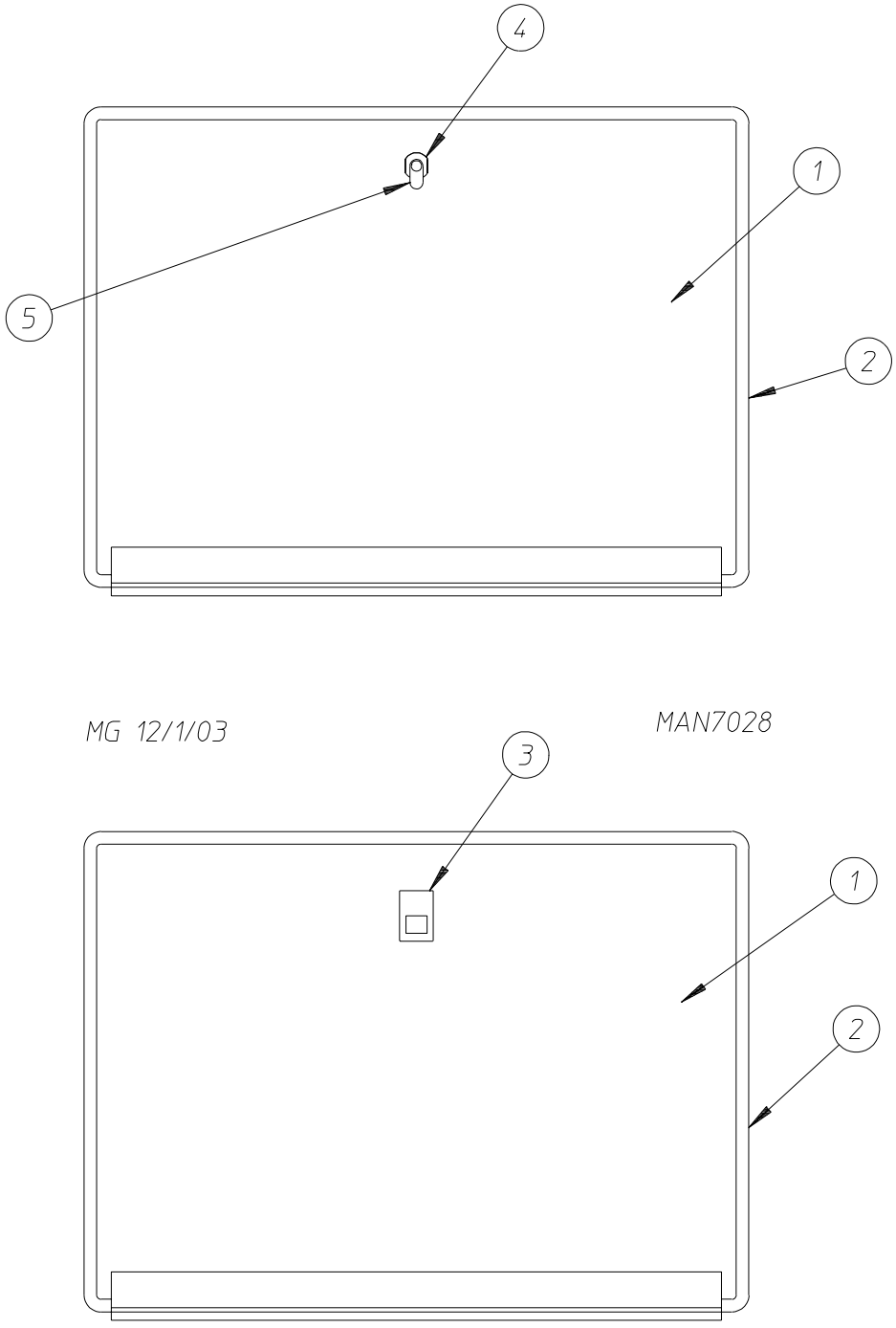

Illus. No.	Part No.	Qty.	Description
1	802277	1	Drop Lint Door (for non-coin models) (includes illus. nos. 1 through 3)
	802265	1	Drop Lint Door (for coin models) (includes illus. nos. 1, 2, and 4)
2	117604	5	Sponge Tape (sold by the foot)
3	170226	1	Slide Latch (for non-coin models)
4	160001	1	Lint Door AD-100 Lock (for coin models)
	160103	1	Key ONLY
5	160016	1	1-1/4” Cam

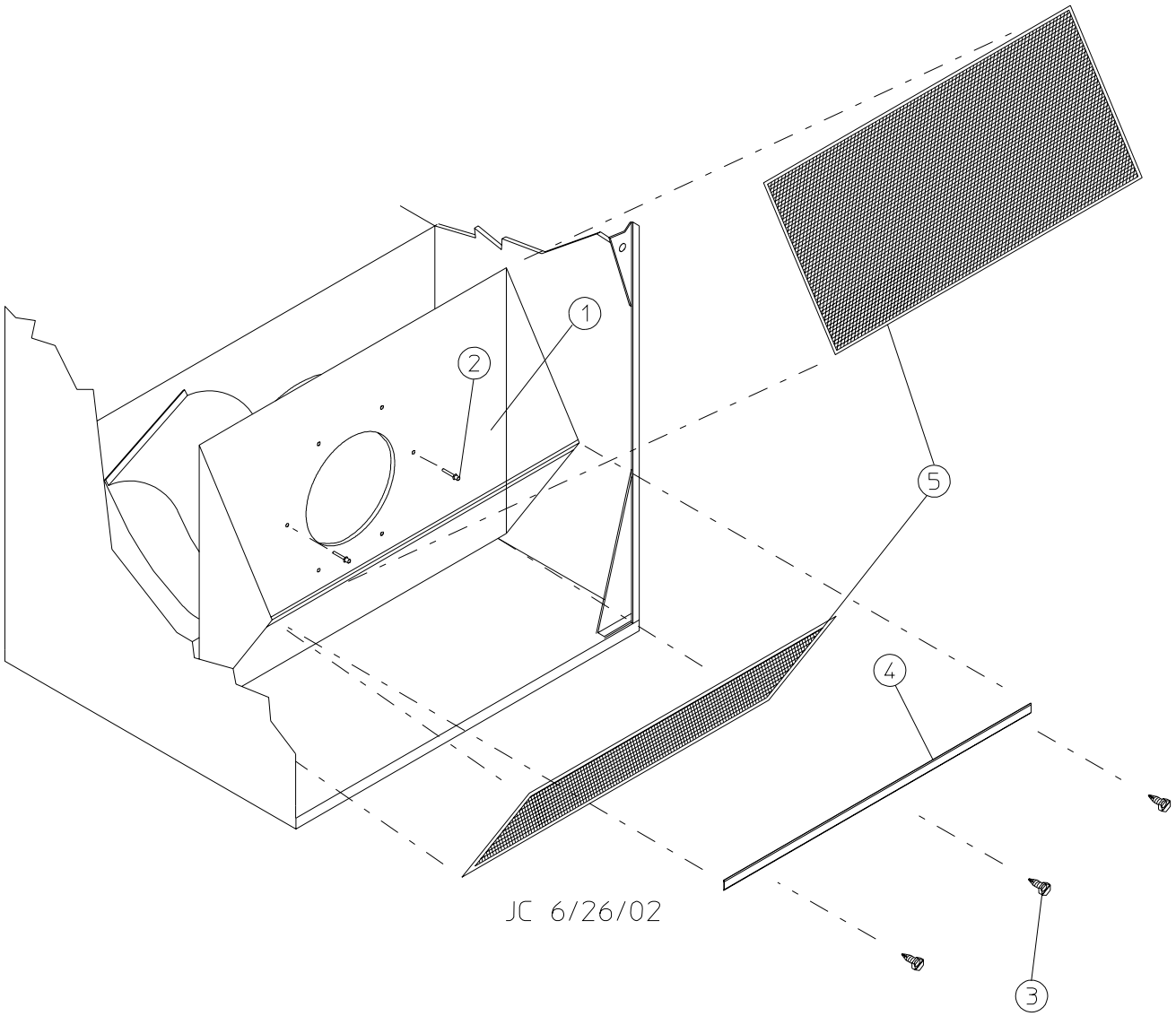

Illus. No.	Part No.	Qty.	Description
1	800401	1	Lint Trap Assembly Complete (includes illus. nos. 1 and 3 through 5)
	800443	1	Lint Trap ONLY
2	154200	6	5/32” Pop Rivet
3	150300	3	#10-16 x 1/2” Hex Washer TEK Screw
4	304100	1	Lint Screen Holder ONLY
5	800500	2	Lint Screen Assembly

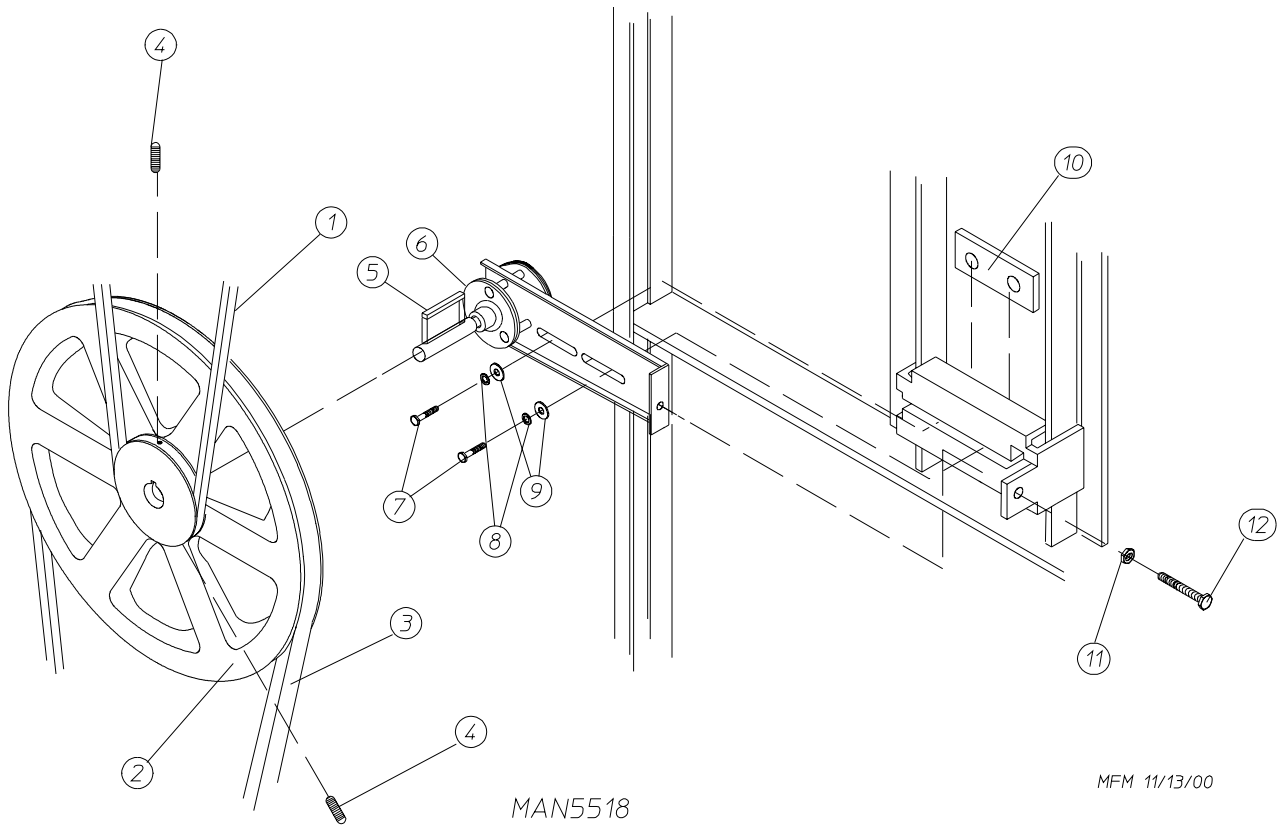

Illus. No.	Part No.	Qty.	Description
1	100100	1	5L-660 V-Belt (basket [tumbler] to idler) - Non-Reversing Models ONLY
	100108	1	5L-680 V-Belt (basket [tumbler] to idler) - Reversing Models ONLY
2	101129	1	9" x 2-1/2" Compound Pulley
3	100105	1	4L-520 V-Belt (idler to motor) For Non-Reversing Models ONLY
	100112	1	4L-610 V-Belt (idler to motor) For Reversing Models ONLY
4	154301	2	5/16-18 x 1" Allen Setscrew
5	100705	1	3/16" x 3/16" x 1-3/8" Key
6	882576	1	Idler Bearing Assembly Complete (includes illus. nos. 5 through 12)
7	150617	2	3/8-16 x 1" Hex Head Machine Bolt
8	153005	2	3/8" Lock Washer
9	153004	2	3/8" Flat Washer
10	801009	1	Idler Square Washer
11	152004	1	5/16-18 Hex Nut
12	150509	1	5/16-18 x 3" Hex Head Machine Bolt

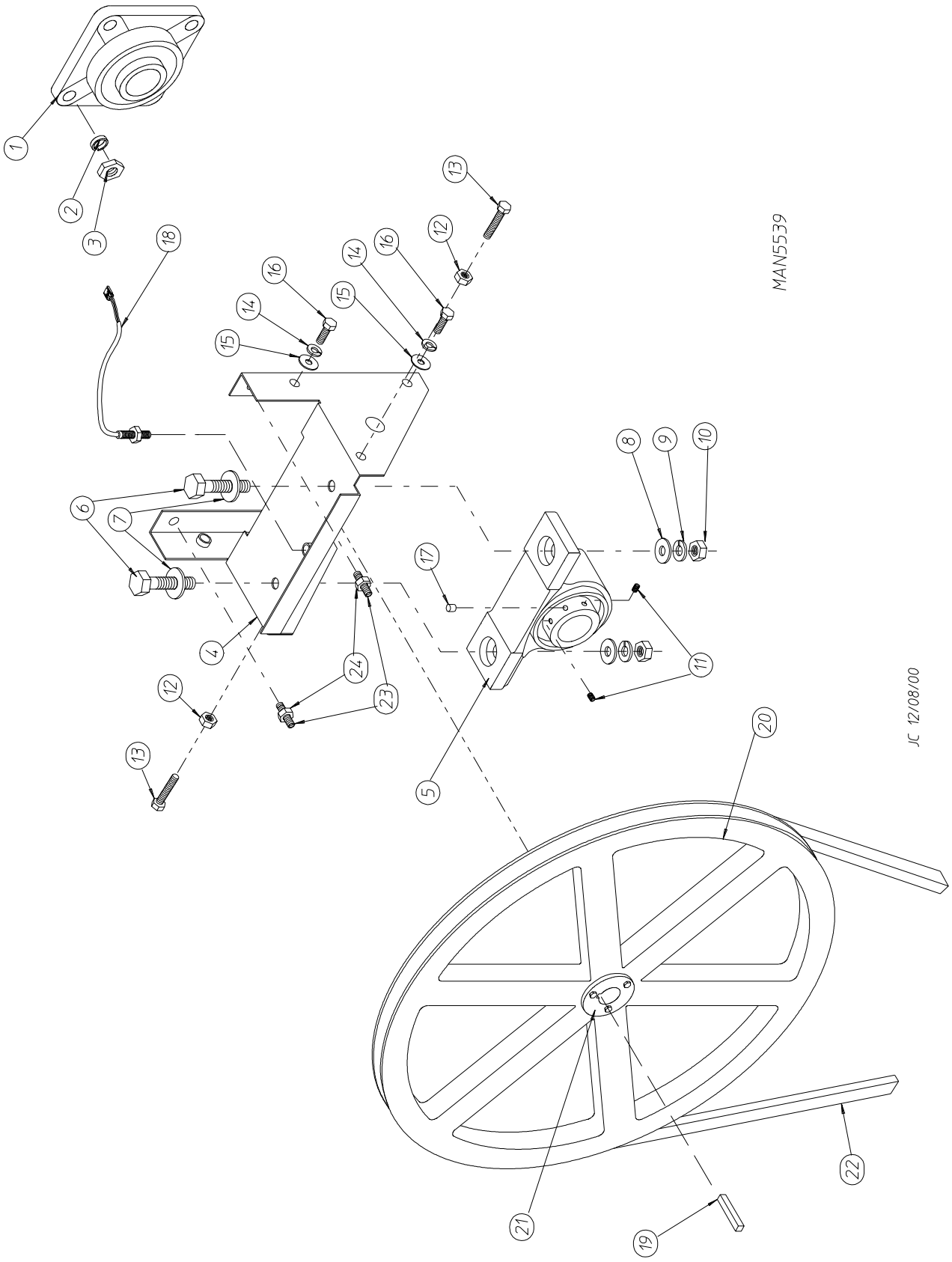
MAN5539
JC 12/08/00

Illus. No.	Part No.	Qty.	Description
1	880220	1	1-3/4" Flange Bearing
2	153025	4	9/16" Lock Washer
3	152050	4	9/16-12 Hex Nut
4	882545	1	Pillow Block Bearing Assembly Complete (includes illus. nos. 4 through 18, 23 and 24)
	882543	1	Pillow Block Bearing Platform ONLY
5	880779	1	1-3/8" Pillow Block Bearing
6	150601	2	3/8-16 x 2" Hex Bolt
7	153004	2	3/8" Flat Washer
8	153004	2	3/8" Flat Washer
9	153005	2	3/8" Lock Washer
10	152005	2	3/8-16 Hex Nut
11	154326	2	5/16-24 x 3/8" Setscrew
12	152004	2	5/16-18 Hex Nut
13	150621	2	5/16-18 x 1-1/2" Tap Bolt
14	153002	4	5/16" Lock Washer
15	153004	6	3/8" Flat Washer
16	150501	4	5/16-18 x 3/4" Tap Bolt
17	102120	1	Sintered 8 Magnet
18	822735	1	Rotational Sensor Assembly
19	100735	1	Shaft Key (for reversing models Only)
	100724	1	Shaft Key (for non-reversing models Only)
20	101100	1	18" Pulley (for non-reversing models Only)
	101118	1	18-3/4" Pulley (for reversing models Only)
21	101110	1	1" Taper Lock Bushing (for reversing models Only)
22	100100	1	5L-660 V-Belt (basket [tumbler] to idler) - Non-Reversing Models ONLY
	100108	1	5L-680 V-Belt (basket [tumbler] to idler) - Reversing Models ONLY
23	150610	2	5/16-18 x 1-1/2 Allen Setscrew
24	152004	2	5/16-18 Hex Nut

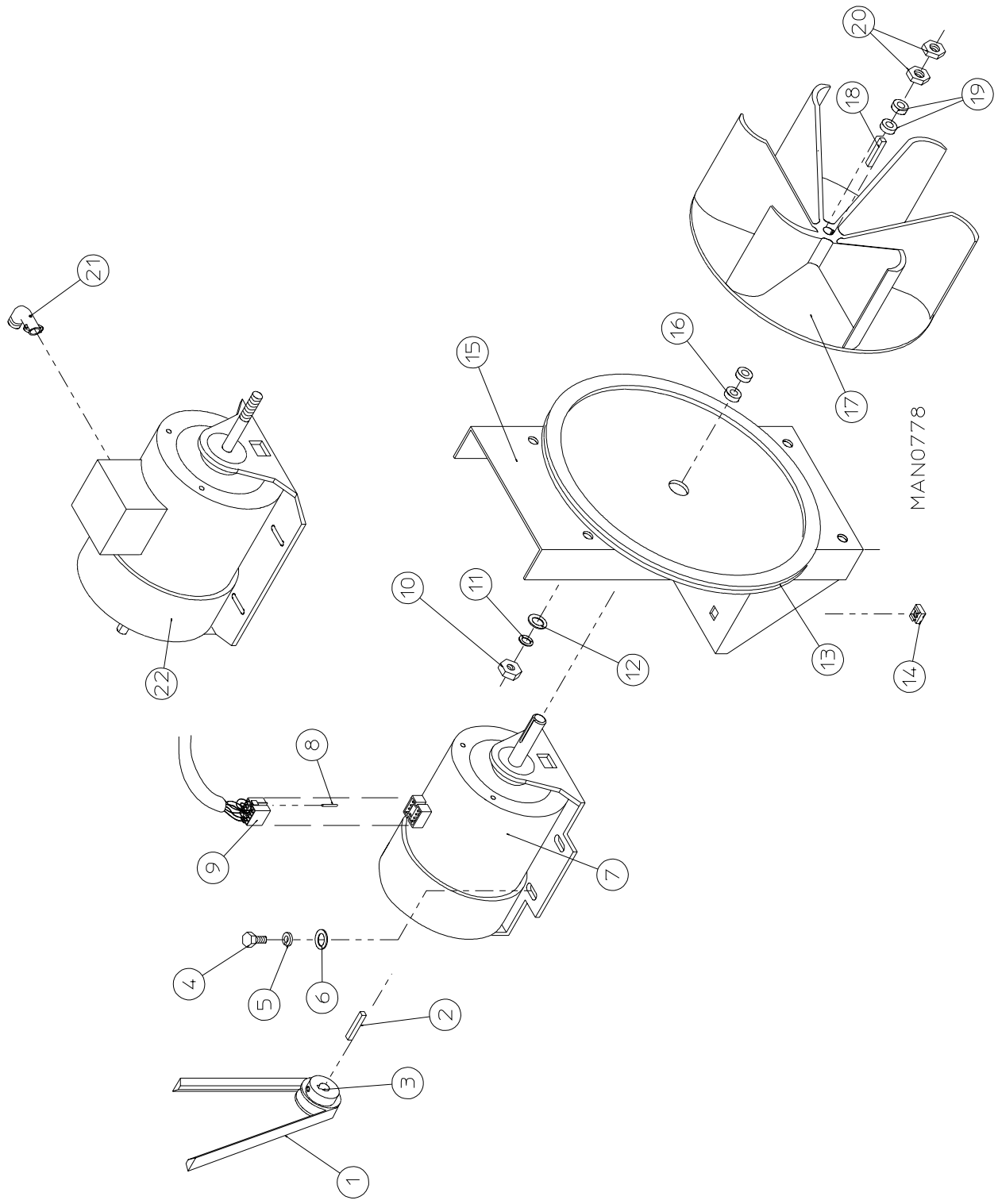
MAN0778

Illus. No.	Part No.	Qty.	Description
1	100105	1	4L-520 V-Belt (idler to motor)
2	100705	1	3/16" x 3/16" x 1-3/8" Key
3	101131	1	1/2" x 2-1/4" Motor Pulley
4	150501	4	5/16-18 x 3/4" Tap Bolt
5	153002	4	5/16" Lock Washer
6	153001	4	5/16" Flat Washer
7	181049	1	1/2 hp 240v 1ø 50 Hz Motor with Plug
8	122701	8	Socket Terminal ONLY
	122801	1	Pin/Socket Extraction Tool – Not Illustrated
9	137030	1	8-Pin Housing Connector
10	152004	4	5/16-18 Hex Nut
11	153002	4	5/16" Lock Washer
12	153001	4	5/16" Flat Washer
13	117600	4	Noise Suppressor Tape (sold by the foot)
14	154000	4	5/16-18 Tinnerman Nut
15	850017	1	Motor Mount ONLY (56Z frame)
	803813	1	1/2 hp 240v 1ø 50 Hz Totally Enclosed, Fan-Cooled (T.E.F.C.) Motor Mount Assembly Complete with Plug Motor (includes illus. nos. 2 through 7 and 13 through 20)
	803810	1	1/2 hp 208/230/380/460v 3ø 50 Hz Totally Enclosed, Fan-Cooled (T.E.F.C.) Motor Mount Assembly Complete (includes illus. nos. 2 through 6 and 13 through 22)
16	153050	2	1/2" S.A.E. Flat Washer
17	100604	1	12-1/2" Impellor with 1/2" Bore
18	100702	1	1/8" x 1/8" x 1-1/2" Key
19	153050	2	1/2" S.A.E. Flat Washer
20	152006	2	1/2-20 Left Hand Jam Nut
21	120200	1	3/8" x 90º Connector
22	100007	1	1/2 hp 208-416 Volt 3ø Motor

Reversing T.E.F.C. Motor Mount Assembly

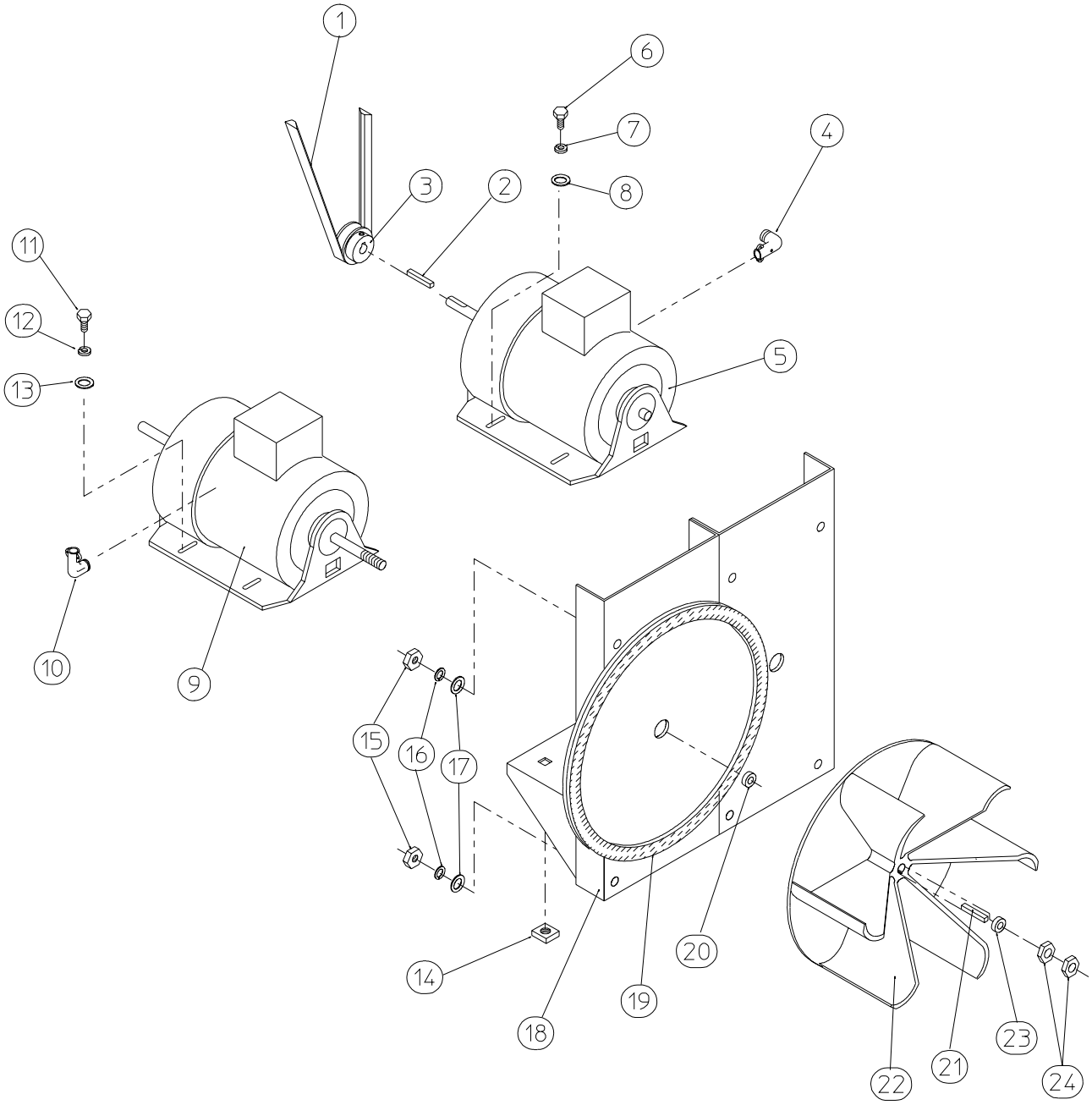

Illus. No.	Part No.	Qty.	Description
1	100112	1	4L-610 V-Belt (to idler motor)
2	100701	1	3/16" x 3/16" x 1" Key
3	101132	1	5/8" x 2" Motor Pulley (for 60 Hz models Only)
	101133	1	5/8" x 2-1/4" Motor Pulley (for 50 Hz models Only)
4	120200	1	3/8" x 90º Connector
5*	181003	1	1/2 hp 208/230/380/460v 3ø 50/60 Hz Motor (56Z frame)
6	150501	4	5/16-18 x 3/4" Tap Bolt
7	153002	4	5/16" Lock Washer
8	153001	4	5/16" Flat Washer
9*	100007	1	1/2 hp 208/230/380/460v 3ø 50/60 Hz Totally Enclosed, Fan-Cooled (T.E.F.C.) Motor (56Z frame)
10	120200	1	3/8" x 90º Connector
11	150501	4	5/16-18 x 3/4" Tap Bolt
12	153002	4	5/16" Lock Washer
13	153001	4	5/16" Flat Washer
14	154000	8	5/16-18 Tinnerman Nut
15	152004	4	5/16-18 Hex Nut
16	153002	4	5/16" Lock Washer
17	153001	4	5/16" Flat Washer
18	850070	1	Reversing Motor Mount ONLY (56Z frame) (includes illus. nos. 18 and 19)
	803802*	1	Reversing Totally Enclosed, Fan-Cooled (T.E.F.C.) Motor Mount Assembly Complete (includes illus. nos. 2 through 14 and 18 through 24) For 60 Hz Models ONLY
	803803*	1	Reversing Totally Enclosed, Fan-Cooled (T.E.F.C.) Motor Mount Assembly Complete (includes illus. nos. 2 through 14 and 18 through 24) For 50 Hz Models ONLY
19	117604	4	Neoprene Sponge Tape (sold by the foot)
20	153050	2	1/2" S.A.E. Flat Washer
21	100702	1	1/8" x 1/8" x 1-1/2" Key
22	100604	1	12-1/2" Impellor with 1/2" Bore
23	153050	2	1/2" S.A.E. Flat Washer
24	152006	2	1/2-20 Left Hand Jam Nut

* Specify voltage when ordering.

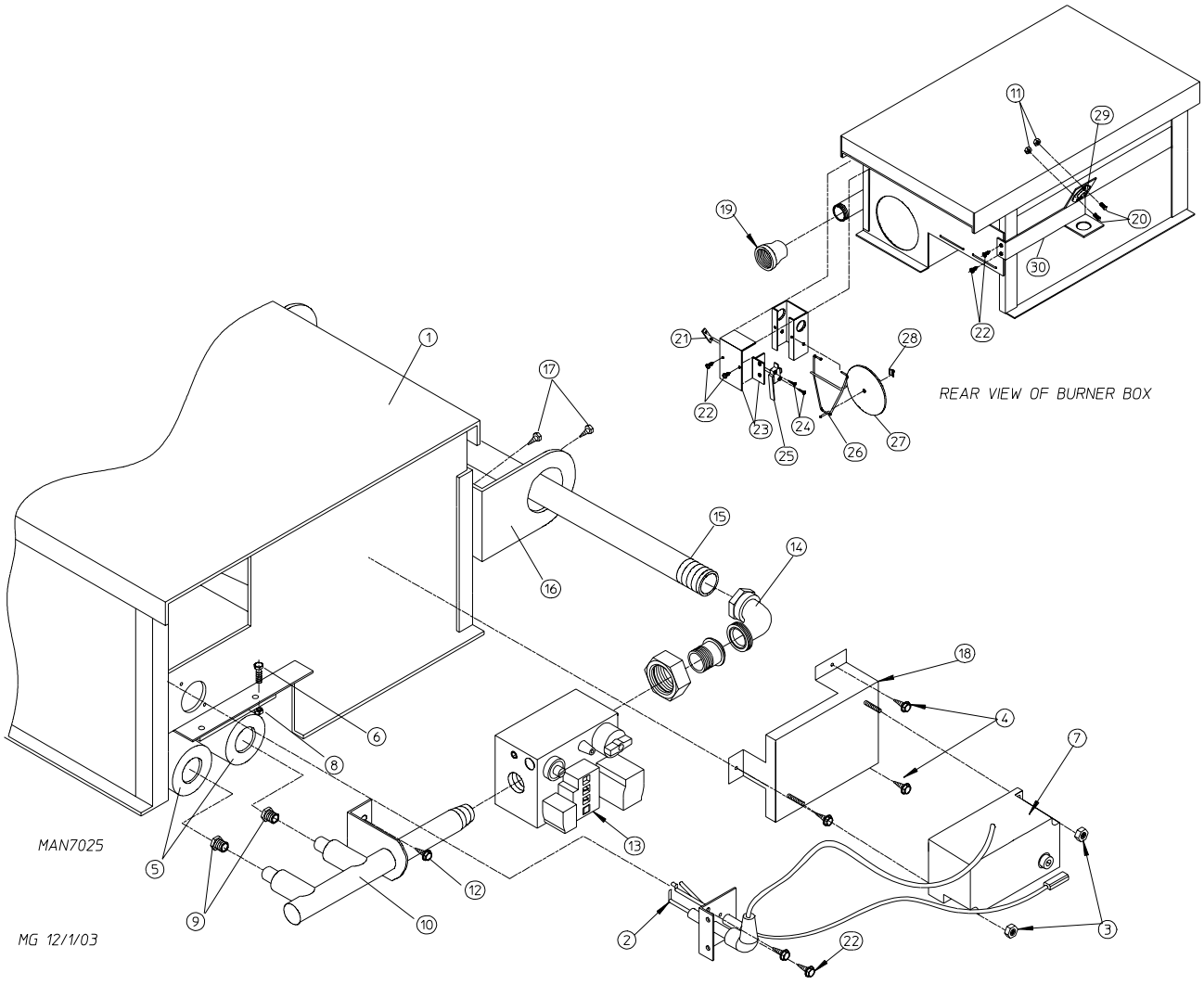
REAR VIEW OF BURNER BOX
MAN7025
MG 12/1/03

Illus. No.	Part No.	Qty.	Description
1	850858	1	Direct Spark Ignition (DSI) Burner Box ONLY
	801190**	1	Natural Gas Burner Assembly (includes illus. nos. 1 through 8 and 10 through 30)
	817208**	1	Liquid Propane (L.P.) Gas Burner Assembly (includes illus. nos. 1 through 8 and 10 through 30)
	883195	1	STI-12 Liquid Propane (L.P.) Conversion Kit
2	809307	1	Ignitor Probe Assembly
3	152013	2	#6-32 Hex Nut
4	150309	5	#10-16 x 1/2" Hex Head TEK Crimptite Screw
5	141105	2	Large Tube Burner
6	150108	2	#8-32 x 1/2" Pan Head Machine Screw
7	128941	1	CE Direct Spark Ignition (DSI) Module (3 tries)
8	151001	2	#8-32 Pal Nut
9	140804*	2	#48 Burner Orifice (liquid propane [L.P.] gas)
	140819*	2	#30 Burner Orifice (natural gas)
10	141230	1	1/2" Direct Spark Ignition (DSI) Manifold (2-port)
11	152013	2	#6-32 Hex Nut
12	150300	2	#10-16 x 1/2" Hex Washer TEK Screw
13	128933	1	1/2" 24 VAC CE Gas Valve (natural gas)
	883255	1	1/2" 24 VAC CE Gas Valve (liquid propane [L.P.] gas)
14	141317	1	1/2" Bronze Union Elbow
15	142809	1	1/2" x 29-1/8" Pipe
16	318700	2	Pipe Bracket (bent)
17	150309	4	#10-16 x 1/2" Hex Head TEK Crimptite Screw
18	810031	1	Direct Spark Ignition (DSI) Module Mounting Bracket
19	142935	1	1/2" B.S.P.T. x 1/2" N.P.T. Transition Coupling
20	150005	2	#6-32 x 1/4" Round Head Machine Screw
21	154004	1	Twin Speed Nut
22	150300	9	#10-16 x 1/2" Hex Washer TEK Screw
23	802799	1	Sail Switch Top and Switch Bracket
24	150303	2	#4 x 3/4" Phillips Pan Head "A" Machine Screw
25	122200	1	SPST Sail Switch ONLY
26	105500	1	Sail Switch Actuator Rod
27	319202	1	Sail Switch Damper (flat)
28	154002	1	1/8" Push On Fastener
29	130201	1	330º Hi-Limit Manual Reset
30	319704	1	Hi-Limit Mounting Bracket

* Consult factory for elevations over 2,000 feet.

** Burner orifices *are not included* and **must be** ordered separately.

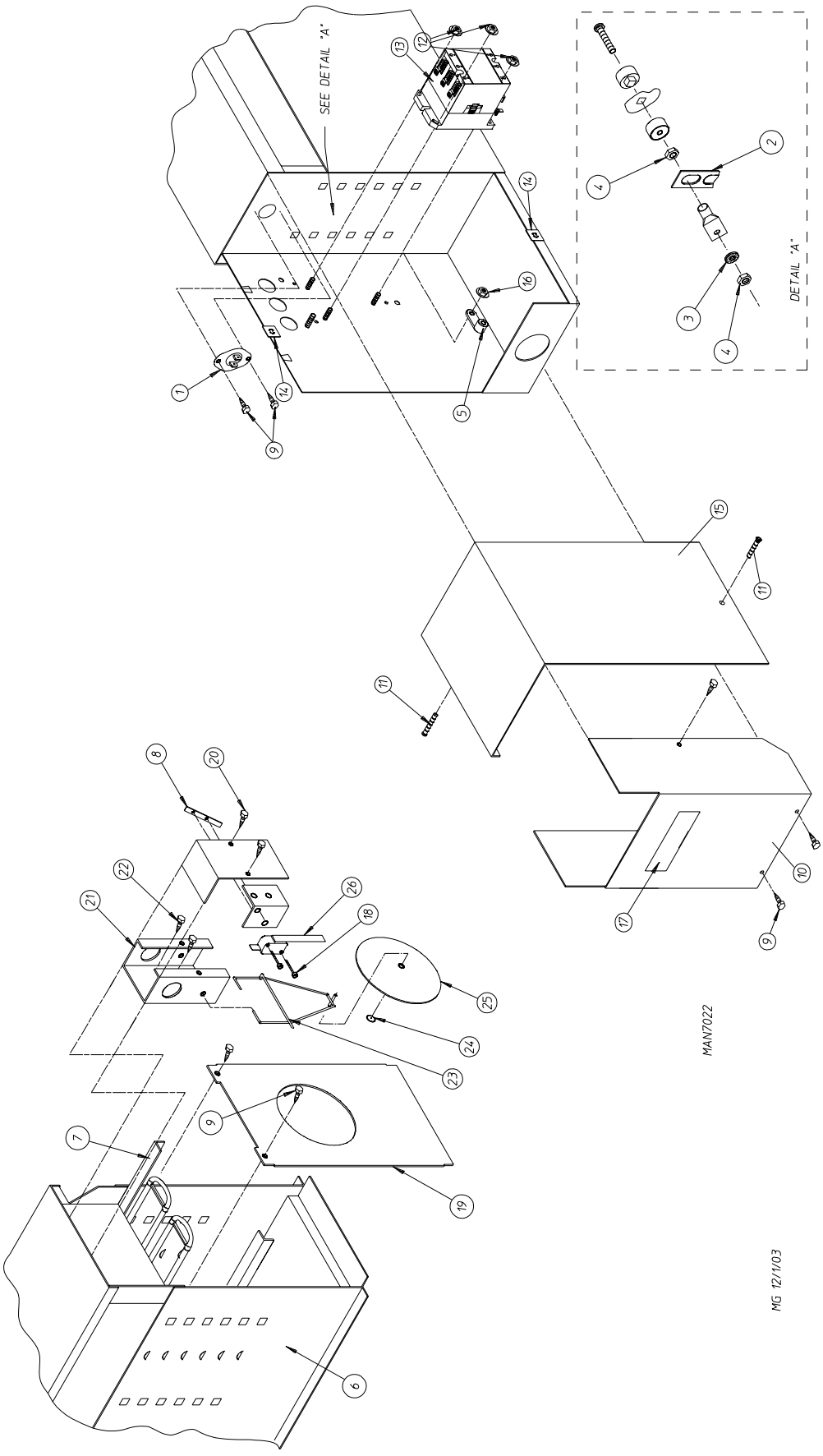
SEE DETAIL "A"
DETAIL "A"
MAN7022
MG 12/1/03

Illus. No.	Part No.	Qty.	Description
1	130400	1	L-290 Thermostat
2	121011	1	Bus Bar 1/2" x 0.32"
3	153009	12	#10 Internal/External Star Washer
4	152008	24	#10-32 Hex Nut
5	121010	1	Ground Lug
6	816120	1	Oven
7	120011	1	4 kW at 240v 22" Electric Elements
8	802801	1	Sail Switch Box Assembly
9	150300	1	#10-16 x 1/2" Hex Washer TEK Screw
10	313787	1	Oven Relay Box Cover
11	150207	1	#10-24 x 1/2" Phillips Round Head Machine Screw
12	151001	3	#8-32 Pal Nut
13	131369	1	75-amp Oven Contactor
14	154001	2	#10-24 Speed Nut
15	322156	1	Small Electric Oven Right Side Cover
16	152014	1	1/4-20 Free Spin Wash Nut
17	112014	1	"Warning High Voltage" Label
18	150303	2	#4 x 3/4" Phillips Pan Head "A" Machine Screw
19	313784	1	Electric Oven Front Cover
20	150300	2	#10-16 x 1/2" Hex Washer TEK Screw
21	802800	1	Sail Switch Box with Bracket and Cover ONLY
	802801	1	Sail Switch Box Assembly (includes illus. nos. 8, 18, and 20 through 26)
22	150300	2	#10-16 x 1/2" Hex Washer TEK Screw
23	105500	1	Sail Switch Actuator Rod
24	154002	1	1/8" Push On Fastener
25	319202	1	Sail Switch Damper (flat)
26	122200	1	SPST Sail Switch ONLY

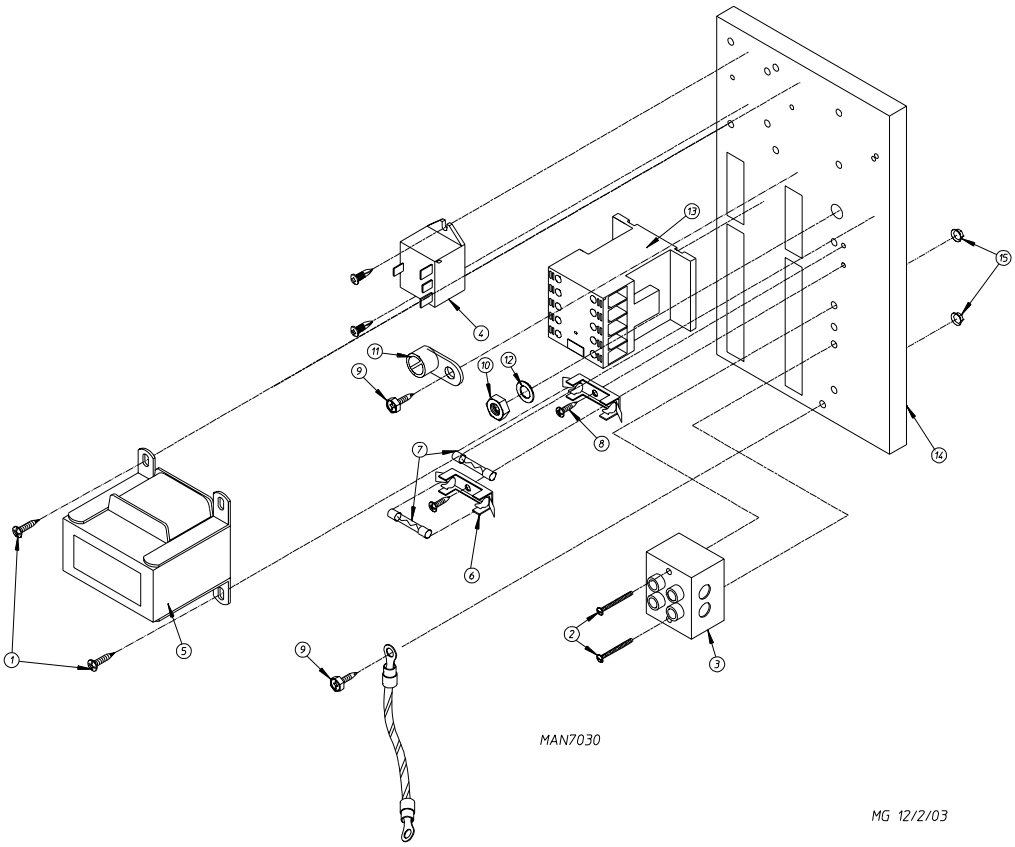

Illus. No.	Part No.	Qty.	Description
1	150300	2	#10-16 x 1/2” Hex Washer TEK Screw
2	150009	2	#6-32 x 1-1/2” Phillips Pan Head Machine Screw
3	120716	1	2-Position Terminal Block
4	131932*	1	Relay SPST 24v Panel
5	830141	1	Transformer Assembly (380v - 416v)
	822792	1	Transformer Assembly (208 - 240v) Electric
	822764	1	Transformer Assembly (208 - 240v) Gas
6	136008	1	Fuse Holder
7	136057	1	1/2-amp 3AG Slo-Blo Fuse
8	150301	3	#8-18 x 7/16” Phillips Pan Head TEK Screw
9	120910	2	#10-32 Green Ground Screw
10	152004	1	5/16-18 Hex Nut
11	121010	1	Ground Lug
12	153002	1	5/16” Lock Washer
13	132495	1	3-Pole Contactor with Arc Suppression
14	322812	1	Mounting Plate
15	151000	2	#6-32 Pal Nut
	884109	1	Rear Electric Panel Complete (208 - 240v) (electric only) (includes illus. nos. 1 through 15)
	884110	1	Rear Electric Panel Complete (208 - 240v) (gas only) (includes illus. nos. 1 through 3 and 6 through 15)
	884111	1	Rear Electric Panel Complete (208 - 240v) (electric only) (includes illus. nos. 1 through 15)

* Electric dryers only.

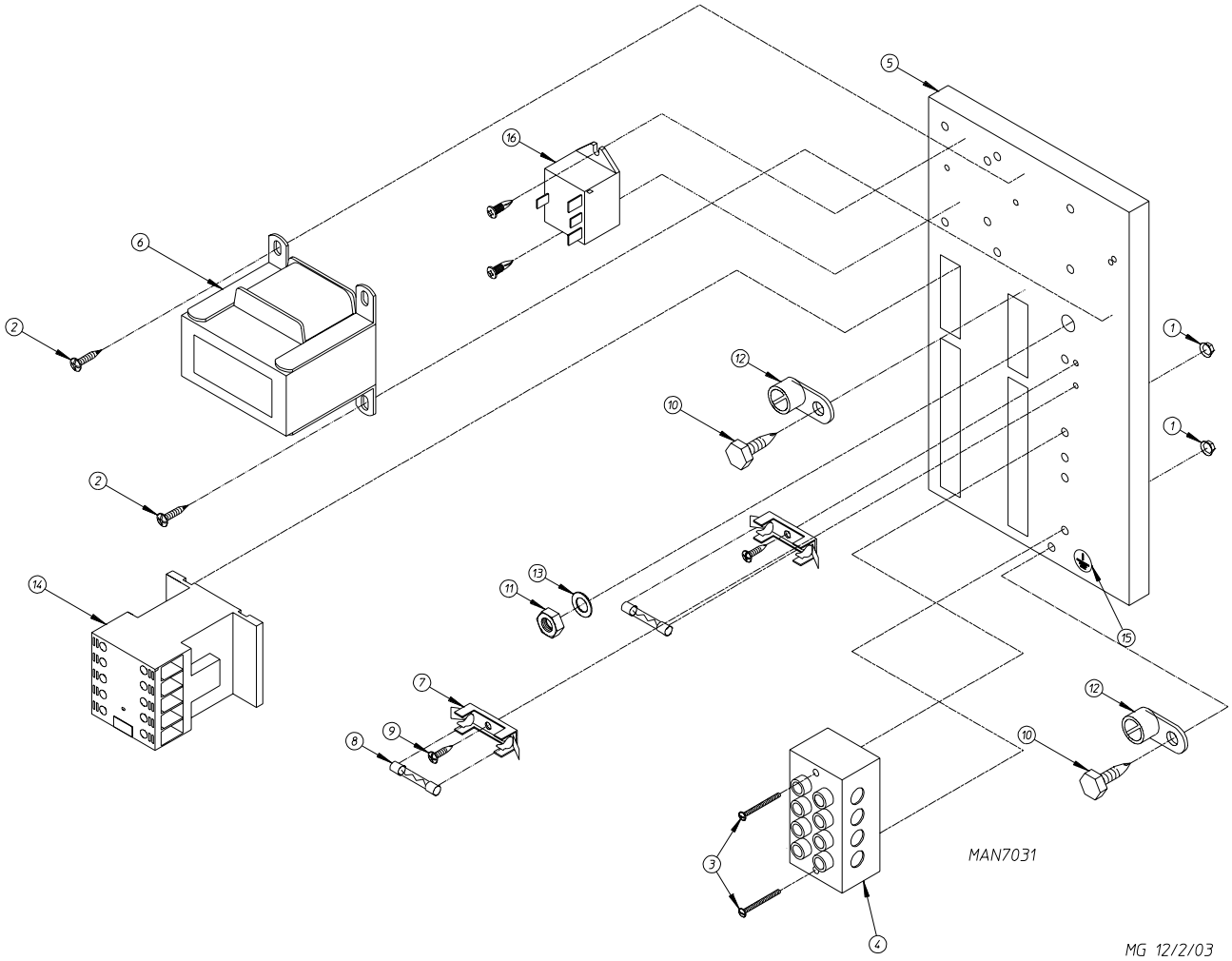

Illus. No.	Part No.	Qty.	Description
1	151000	2	#6-32 Pal Nut
2	150300	2	#10-16 x 1/2” Hex Washer TEK Screw
3	150009	2	#6-32 x 1-1/2” Phillips Pan Head Machine Screw
4	120701	1	4-Position Terminal Block
5	322812	1	Mounting Plate
	884108	1	Rear Electric Panel Complete (380v) (electric heated only) (includes illus. nos. 1 through 16)
6	817237	1	Transformer Assembly (240-24v)
7	136008	2	Fuse Holder
8	136057	2	1/2-amp 3AG Slo-Blo Fuse
9	150301	4	#8-18 x 7/16” Phillips Pan Head TEK Screw
10	120910	2	#10-32 Green Ground Screw
11	152004	1	5/16-18 Hex Nut
12	121010	2	Ground Lug
13	153002	1	5/16” Lock Washer
14	132495	1	3-Pole Contactor with Arc Suppression
15	112075	1	Ground Label
16	131932	1	Relay SPST 24v Panel

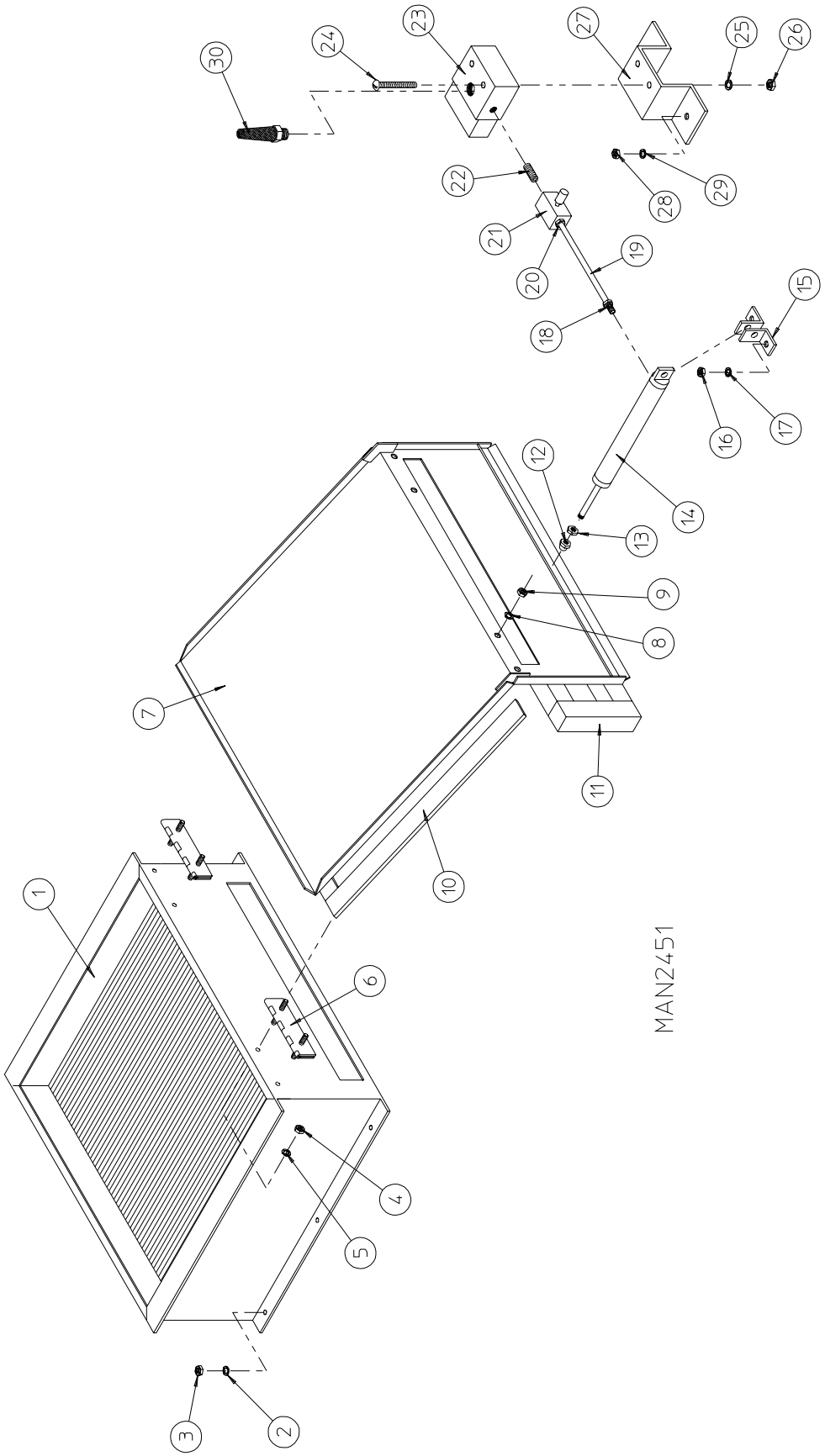
1
2
3
4
5
6
7
8
9
10
11
12
13
14
15
16
17
18
19
20
21
22
23
24
25
26
27
28
29
30
MAN2451

Illus. No.	Part No.	Qty.	Description
1	165008	1	Steam Coil Assembly
2	153002	6	5/16" Lock Washer
3	152004	6	5/16-18 Hex Nut
4	152002	4	1/4-20 Hex Nut
5	153007	4	1/4" Lock Washer
6	820321	2	Steam Damper Hinge Assembly
7	803416	1	Steam Damper Assembly (includes illus. nos. 7, 10, and 11)
8	153007	4	1/4" Lock Washer
9	152002	4	1/4-20 Hex Nut
10	115995	60	Steam Damper Gasket (sold by the inch)
11	102350	1	Steam Damper Foam (68-1/2" length)
12	151006	1	5/16-24 Stainless Steel Acorn Nut
13	152051	1	5/16-24 Right Hand Jam Nut
14	100495	1	11/16" Diagram x 3" Stroke Piston
15	323365	2	Left and Right Piston Support
16	152002	2	1/4-20 Hex Nut
17	153007	2	1/4" Lock Washer
18	100472	1	1/4" x 1/8" Connector
19	143110	1	1/4" Tubing (sold by the foot)
20	100472	1	1/4" x 1/8" Connector
21	100496	1	1/8" Needle Valve
22	143238	1	1/8" Close Nipple
23	100498	1	3-Way Micro Valve - 24 VAC
24	150002	2	#6-32 x 1" Slotted Machine Screw
25	153010	2	#6 Internal/External Star Washer
26	152000	2	#6-32 Hex Nut
27	330987	1	Micro Valve Support Bracket
28	152002	2	1/4-20 Hex Nut
29	153007	2	1/4" Lock Washer
30	100520	1	1/8" N.P.T. Silencer (muffler)

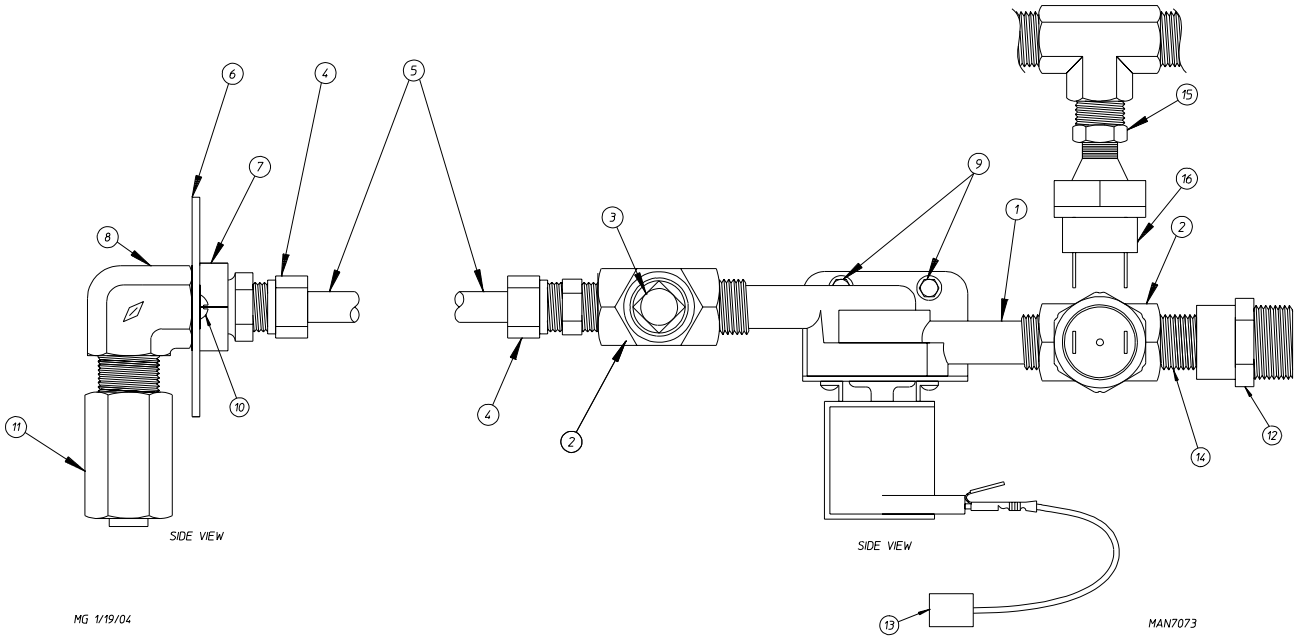

Illus. No.	Part No.	Qty.	Description
1	165114	1	Fire Suppression System (F.S.S.) Solenoid Valve 24v 50/60 Hz
2	143220	2	3/8” F.P.T. Brass Tee
3	143251	1	3/8” M.P.T. Brass Plug
4	143208	2	3/8 Comp x 3/8 M.P.T. Brass Connect
5	143099	16”	3/8” OD x 0.035 Wall Copper Tubing
6	311588	1	Sprinkler Head Mounting Plate
7	143303	1	3/8” Brass Lock Nut
8	143155	1	3/8” Brass Street Elbow
9	150300	2	#10-16 x 1/2” Hex Washer TEK Screw
10	150301	2	#8-18 x 7/16” Phillips Pan Head TEK Screw
11	143581	1	3 GPM 3/8” F.P.T. Spray Nozzle
12	143025	1	3/8” NPT Nylon Hose Adaptor
13	824081	1	RC Network Assembly
14	143241	1	3/8” Close Brass Nipple
15	143315	1	3/8” x 1/8” F.P.T. Brass Switch
16	136987	1	Water Jet Pressure Switch

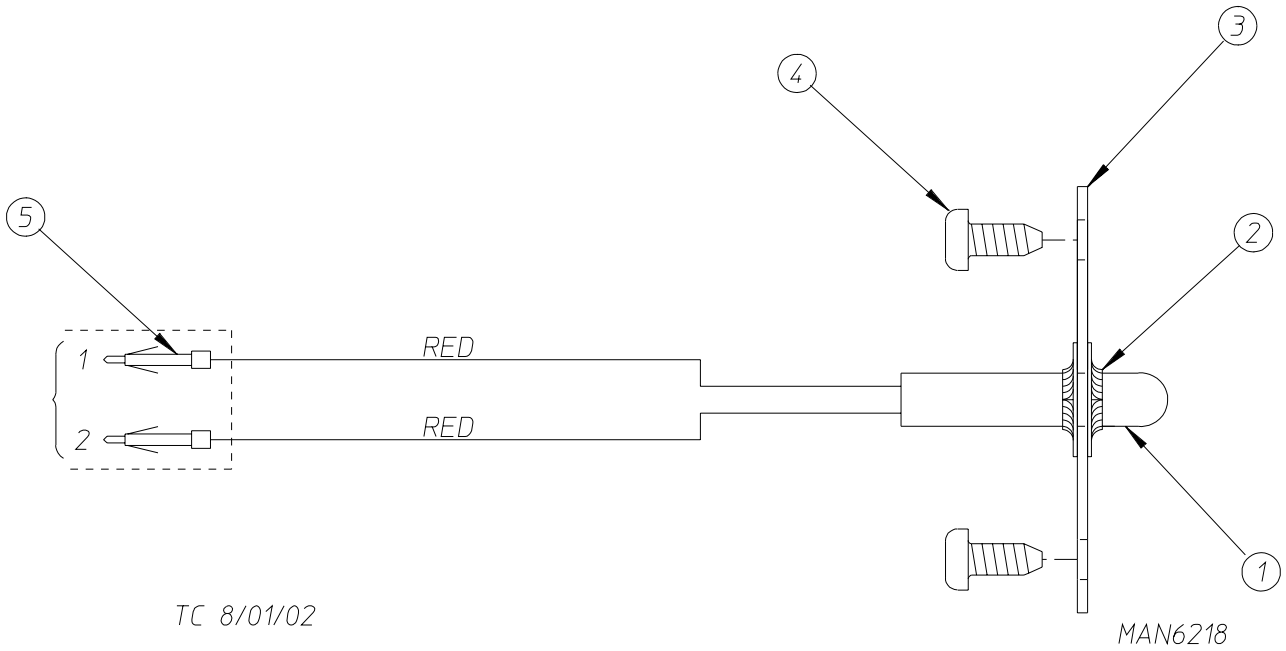

Illus. No.	Part No.	Qty.	Description
1	822752	1	Fire Suppression System (F.S.S.) Temperature Probe Assembly (includes illus. nos. 1 through 5)
2	154007	2	Push On Fastener
3	390390	1	Sensor Bracket ONLY
4	150301	2	#8-18 x 7/16” Phillips Pan Head TEK Screw
5	122647	1	Connector ONLY (**does not** include terminals)

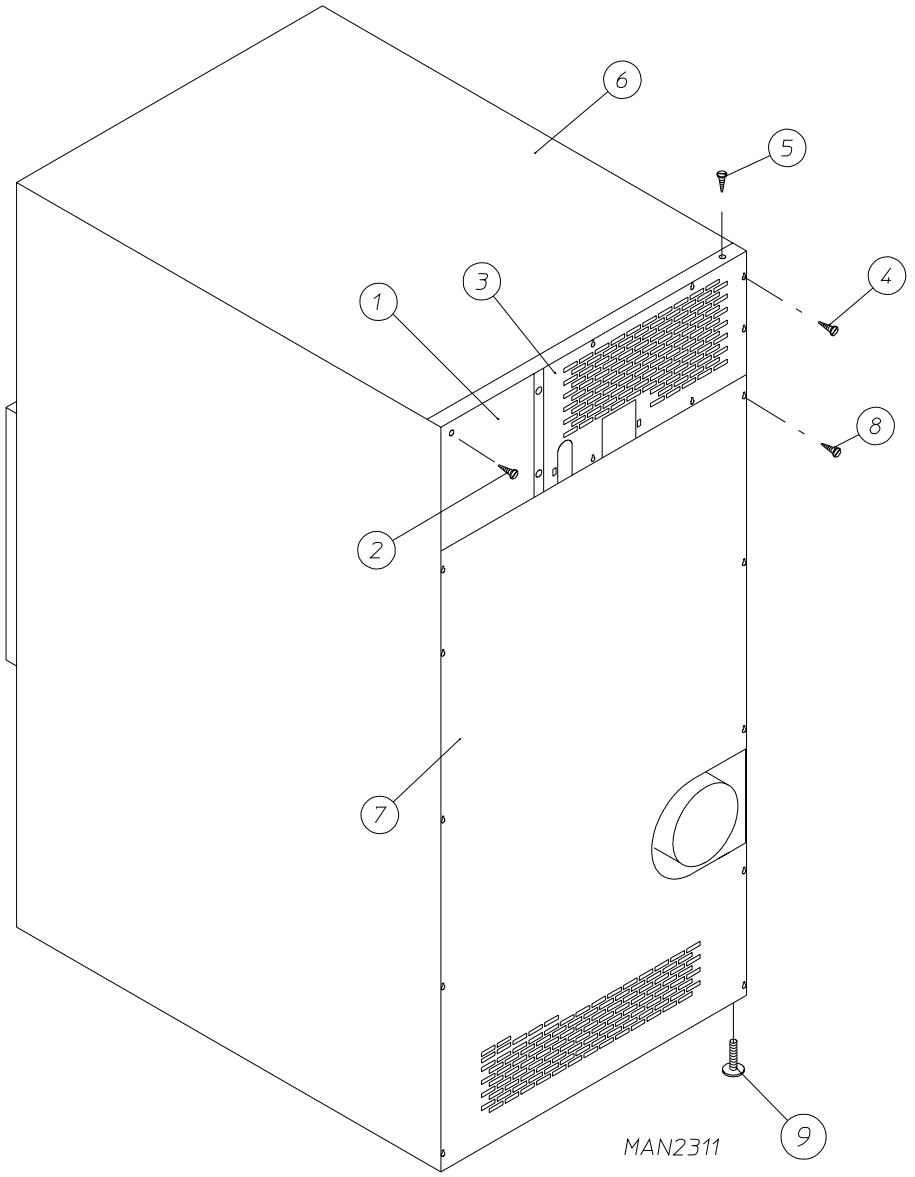

Illus. No.	Part No.	Qty.	Description
1	322809	1	Back Electrical Box Cover
2	150301	4	#8-18 x 7/16” Phillips Pan Head TEK Screw
3*	314424	1	Gas Top Back Guard
	322155	1	Electric Top Back Guard
4	150301	7	#8-18 x 7/16” Phillips Pan Head TEK Screw
5	150300	10	#10-16 x 1/2” Hex Washer TEK Screw
6*	322015	1	Outer Top (gas)
	322834	1	Outer Top (electric)
7	322082	1	“Plain” Bottom Back Guard
8	150301	13	#8-18 x 7/16” Phillips Pan Head TEK Screw
9	103500	4	Leveling Leg

* There is no outer top or top back guard on steam models.

kW	Voltage	Phase	Wire	Oven Assembly*	Element			Oven Wire with Crimp Terminal			Terminal Lug		Bus Bar P/N: 121011	Oven Relay	
					Qty.	kW	Part No.	Qty.	Size	Part No.	Qty.	Part No.		Cat. No.	Part No.
22	400	3ø	3 or 4	818096	6	4	120011	1	#8	882571	1	121010	1	DPA33	131352
24	240	3ø	3 or 4	815894	6	4	120011	1	#6	882556	1	121010	1	DPA63	131369
27	380	3ø	3 or 4	816121	6	5	120013	1	#8	882571	1	121010	1	DPA43	131357

* When ordering Oven Assembly Complete, specify 3 or 4 wire when applicable as well as if dryer has microprocessor controls.

Part No.	Description
114006	"WARNING - Fire Hazards" Label
112280	"Clean Lint Screen" Label
114001	"CAUTION - Exhaust/Lint Screen" Label
114251	"Phase 7 Non-Coin Program Location" Label
114548	"Phase 7 Coin Program Location" Label
120100	3/8" Straight (BX) Connector
120300	3/8" x 45º (BX) Connector
120400	3/8" Red Jacket (BX) Insulator
120500	3/8" Jiffy Clip (BX) Retainer Clip
120600	3/8" Greenfield (BX)
120707	(2-Position) Terminal Strip
120708	(3-Position) Terminal Strip
120800	1/4" In-Line Connector
120802	Red Butt Connector
120902	#74B Wire Nut
120903	Crimp-On Wire Nut
121014	1/4" Insulated (female) Terminal
121026	Tab Receptacle Combination
121499	5-1/2" Harness Tie
121500	8" Harness Tie
122804	Manometer (hydro gauge) for Measuring Gas Pressure
404502	White Brush-In-Cap Bottle Touch-Up Paint

ACJ SYSTEMS, S.L. es una empresa joven, din□mi ca y en proceso de expansi□, c reada en el a□ 2000 y dedi cada al mundo de la lavandería industrial, con el objetivo de convertirse en un fiel proveedor del profesional que d□a t ras d□a e st□r abajando en este sector.

La clave de nuestro □xito consiste en apostar por la calidad, la innovaci□, la agilidad en las e ntregas y en ofrecer soluciones a nuestros clientes.

Compra-venta de m□quinas de l avander□a de segunda mano: en nuestras instalaciones las reparamos y acondicionamos para ser vendidas en perfectas condiciones y hacemos la puesta en marcha en casa del cliente.
Reparaci□ de m□quinas, ya sea en nuestras instalaciones o en las de nuestros clientes.
Suministro de materiales y piezas de recambio para cualquier m□quina de l avander□a indu strial.
Mantenimiento de lavander□as.

www.acjsystems.com

ACJ SYSTEMS, S.L. | C.Osona,10 Tona-Barcelona 08551 | T.+34 93 812 49 41 | acj@acjsystems.com