Despieces

DESPIECE PLANCHADORA SERIE PS-51-283150-D_rev01

Mod.	From serial no. A partir máq. nº
PS / PSP-5115	615.016
PS / PSP-5119	620.123
PS / PSP-5125	625.086
PS / PSP-5132	630.157

Parts Handbook for Flatwork Ironers

Manual de Despiece para Planchadoras Secadoras

Notice Vues Eclatées pour Sécheuses Repasseuses

PS / PSP-51**

GIRBAU, S.A.
Crta de Manlleu, km. 1
08500 VIC (Barcelona) • SPAIN
Tel. 34 93 8861100
Fax 34 93 8860785 girbau@girbau.es
www.girbau.com

Parts Handbook
Despiece
Vues Eclatées

PS / PSP-51**

Cod. 283150 D
Rev. 01/0910

NOTES TO USE PARTS LIST

Sheets no. 1, 2, 3, 4, 5 and 6:
Are common for all versions.

Sheet no. 7:
Relates to electrical heated machines.

Sheet no. 8:
Relates to gas heated machines.

Sheets no. 9 and 10:
Are only for machines with folder **(PSP)**

Sheet no. 11:
Relates to steam heated machine.

(For 5115), (For 5119), (For 5125) or (For 5132) indicates that the parts are only used for models **PS/PSP-5115, PS/PSP-5119, PS/PSP-5125 or PS/PSP-5132** respectively.

ACLARACIONES PARA EL USO DEL DESPIECE

Hojas nº 1, 2, 3, 4, 5 y 6:
Son comunes a todas las variantes.

Hoja nº 7:
Corresponde a las máquinas con calefacción eléctrica.

Hoja nº 8:
Corresponde a las máquinas con calefacción a gas.

Hojas nº 9 y 10:
Son sólo para las máquinas con plegador **(PSP)**.

La hoja nº11:
Corresponde a las máquinas con calefacción a vapor.

Las piezas que llevan **(Para 5115), (Para 5119), (Para 5125) ó (Para 5132)** significa que sirven sólo para los modelos **PS/PSP-5115, PS/PSP-5119, PS/PSP-5125 ó PS/PSP-5132** respectivamente.

NOTES UTILISATION VUES ECLATEES

Feuilles no. 1, 2, 3, 4, 5 et 6:
Sont communes à toutes les versions.

Feuille no. 7:
Correspond aux machines à chauffage électrique.

Feuille no. 8:
Correspond aux machines à chauffage à gaz.

Feuilles no. 9 et 10:
Sont seulement pour les machines avec plieuse **(PSP).**

Feuille no. 11:
Correspond aux machines à chauffage à vapeur.

Les pièces qui indiquent **(Pour 5115), (Pour 5119), (Pour 5125) ou (Pour 5132)** signifie qu'elles servent seulement pour les modèles **PS/PSP-5115, PS/PSP-5119, PS/PSP-5125 ou PS/PSP-5132** respectivement.

VERY IMPORTANT:
Before ordering parts be sure they have not been modified. Check i ton modification sheet, after the corresponding sheet.

MUY IMPORTANTE:
Al pedir una pieza cerciorarse antes de que la misma no ha sido modificada. Si lo hubiese sido, estaría situada como hoja de modificaciones, detrás de la hoja correspondiente.

TRES IMPORTANT:
Avant de commander une pièce, s'assurer qu'elle n'a pas été modifiée. Le vérifier sur feuille de modifications, derrière la feuille correspondante.

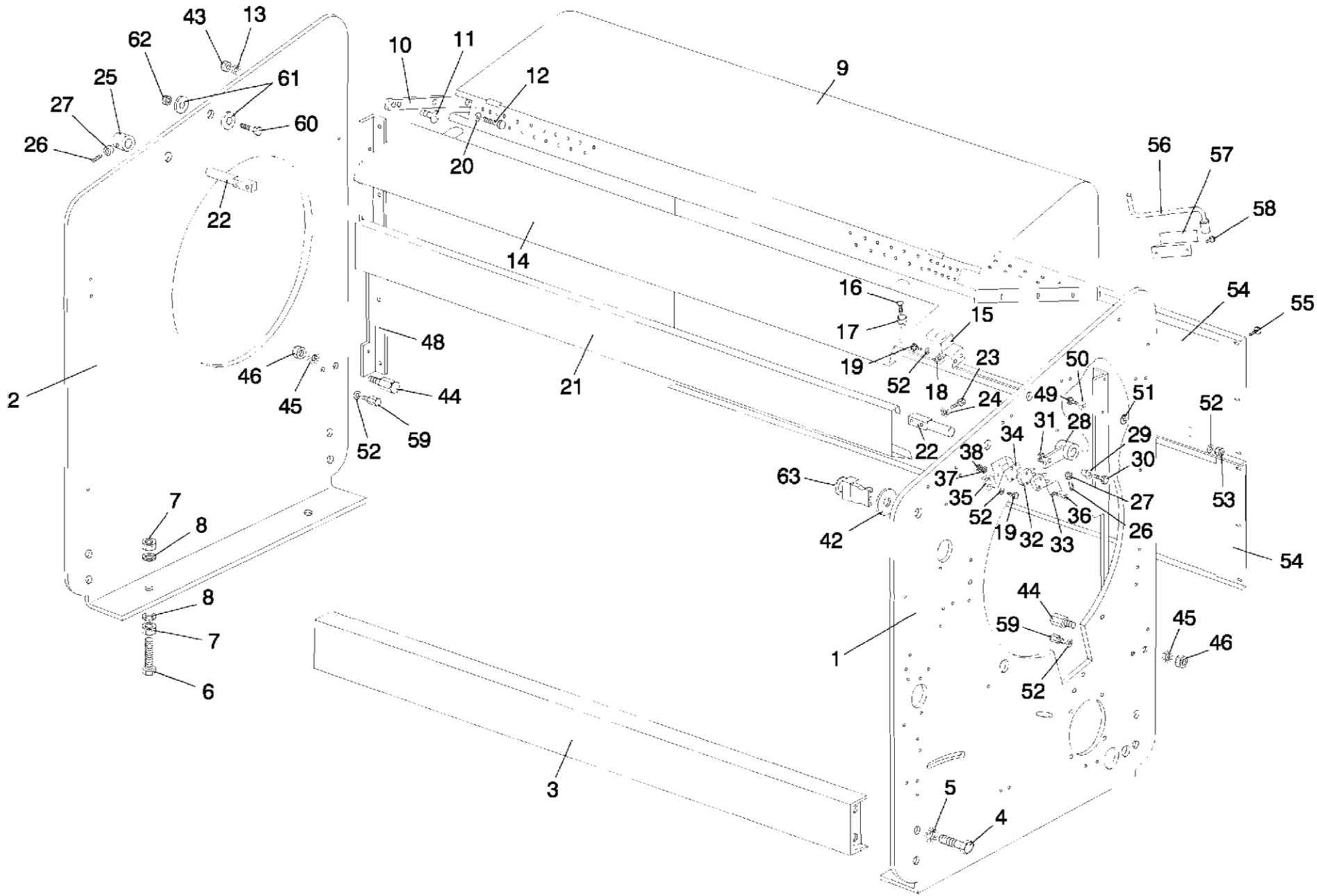
43
13
62
61
25
27
60
26
10
11
12
9
20
22
14
56
57
58
16
17
15
54
55
48
19
52
18
23
24
50
49
51
52
2
46
45
44
21
59
52
22
31
28
29
34
38
30
63
37
35
27
53
7
8
52
19
32
33
36
26
42
54
8
44
59
45
46
7
1
52
6
3
5
4

U.13070

Nº	REF	DENOMINATION	DENOMINACIÓN	DENOMINATION
1	289546	RIGHT BASE	BANCADA DERECHA	BATI DROIT
2	289553	LEFT BASE	BANCADA IZQUIERDA	BATI GAUCHE
3	273763	BASE JOINING (FOR 5115)	UNION BANCADAS (PARA 5115)	UNION BATI (POUR 5115)
	273748	BASE JOINING (FOR 5119)	UNION BANCADAS (PARA 5119)	UNION BATI (POUR 5119)
	273722	BASE JOINING (FOR 5125)	UNION BANCADAS (PARA 5125)	UNION BATI (POUR 5125)
	269886	BASE JOINING (FOR 5132)	UNION BANCADAS (PARA 5132)	UNION BATI (POUR 5132)
4	175786	BIC.HEX SCREW DIN933-8.M16X40	TOR.EX.DIN933-8.8 B.TRI.M16X40	VIS HEX.DIN933-8,8 BICR M16X40
5	149666	RONDELLE DENT.EXT. DIN6798 M16	ARAN.DEN.EXT.B.TRI.DIN6798M16	EXT. TOOTHED WASHER DIN6798M16
6	172874	BIC HEX.SCREW DIN933-8 M16X100 x	TOR.EX.DIN933-8.8B.TRI.M16X120	VIS HEX DIN933-8,8 BIC M16X100
7	150276	BICR HEX.NUT DIN934-8 M-16	TUER.EX.DIN934-8 B.TRI.M16	ECROU HEX.DIN934-8 BICR M-16
8	149385	BICR.WASHER B DIN125-ST 17	ARAN.B DIN125-ST B.TRI.17	RONDELLE B DIN125-ST BICR.17
9	275420	ASPIRATION HOSE EXHAUST (FOR 5115)	TUBO ASPIRACION VAHOS (PARA 5115)	TUBE ASPIRATION VAPEURS (POUR 5115)
	275412	ASPIRATION HOSE EXHAUST (FOR 5119)	TUBO ASPIRACION VAHOS (PARA 5119)	TUBE ASPIRATION VAPEURS (POUR 5119)
	275404	ASPIRATION HOSE EXHAUST (FOR 5125)	TUBO ASPIRACION VAHOS (PARA 5125)	TUBE ASPIRATION VAPEURS (POUR 5125)
	268672	ASPIRATION HOSE EXHAUST (FOR 5132)	TUBO ASPIRACION VAHOS (PARA 5132)	TUBE ASPIRATION VAPEURS (POUR 5132)
10	268771	ASPIRATION HOSE SUPPLEMENT	SUPLEMENTO TUBO ASPIRACION	SUPPLEMENT TUBE ASPIRATION
11	144766	SCREW DIN963 INOX A2-70 M 8X15	TOR.AV.DIN963 INOX A2-70 M8X15	VIS DIN963 INOX A2-70 M 8X15
12	144915	INOX HEX SCREW DIN933 M 6X25	TOR.EX.DIN933INOX A2-70 M 6X25	VIS HEX INOX DIN933 M 6X25
13	149716	BICR.EXT TOOT.WASH.DIN6798 M6	ARAN.DEN.EXT.B.TRI.DIN6798M 6	RONDEL.DEN.EX.BICR DIN6798 M6
14	274803	UPPER COVER (FOR 5115)	TAPA SUPERIOR (PARA 5115)	COUVERCLE SUPERIOR (POUR 5115)
	274795	UPPER COVER (FOR 5119)	TAPA SUPERIOR (PARA 5119)	COUVERCLE SUPERIOR (POUR 5119)
	274787	UPPER COVER (FOR 5125)	TAPA SUPERIOR (PARA 5125)	COUVERCLE SUPERIOR (POUR 5125)

Nº	REF	DENOMINATION	DENOMINACIÓN	DENOMINATION
	268789	UPPER COVER (FOR 5132)	TAPA SUPERIOR (PARA 5132)	COUVERCLE SUPERIOR (POUR 5132)
15	262196	LID SUPPORT	APOYO TAPA	APPUI COUVERCLE
16	133033	INOX FLAT SCREW DIN85 M8X25 A2	TOR.PLA.DIN85 INOX A2-70 M8X25	VIS PLAT INOX DIN85 M8X25 A270
17	194498	LID WASHER	ARANDELA TAPAS	RONDELLE COUVERCLES
18	191924	CAGED NUT M8 1-1,7	TUER.ENJ.M8 1-1,7 R.310010-8	ECROU ENCAGE M8 1-1,7
19	146373	BICR.HEX SCREW DIN933-8 M 8X10	TOR.EX.DIN933-8.8 B.TRI.M 8X10	VIS HEX BICR.DIN933-8.8 M 8X10
20	149526	BICR.WASHER B DIN125-ST 6,4	ARAN.B DIN125-ST B.TRI. 6,4	RONDELLE B DIN125-ST BICR.6,4
21	407288	FINGER PROTECTION 5115.GREY (WITHOUT FOLDER)	GUARDAMANOS 5115 GRIS (SIN PLEGADOR)	PROTECTION-DOIGTS 5115.GRIS (SANS PLIEUSE)
	407296	FINGER PROTECTION.5115P.GREY (WITH FOLDER)	GUARDAMANOS 5115P GRIS (CON PLEGADOR)	PROTECTION-DOIGTS 5115P.GRIS (AVEC PLIEUSE)
	407304	FINGER PROTECTION 5119 GRIS (WITHOUT FOLDER)	GUARDAMANOS 5119 GRIS (SIN PLEGADOR)	PROTECTION-DOIGTS 5119 GRIS (SANS PLIEUSE)
	407312	FINGER PROTECTION 5119P GREY (WITH FOLDER)	GUARDAMANOS 5119P GRIS (CON PLEGADOR)	PROTECTION-DOIGTS 5119P GRIS (AVEC PLIEUSE)
	407320	FINGER PROTECTION 5125 GRIS (WITHOUT FOLDER)	GUARDAMANOS 5125 GRIS (SIN PLEGADOR)	PROTECTION-DOIGTS 5125 GRIS (SANS PLIEUSE)
	407338	FINGER PROTECTION 5125P GRIS (WITH FOLDER)	GUARDAMANOS 5125P GRIS (CON PLEGADOR)	PROTECTION-DOIGTS 5125P GRIS (AVEC PLIEUSE)
	407346	FINGER PROTECTION 5132 GRIS (WITHOUT FOLDER)	GUARDAMANOS 5132 GRIS (SIN PLEGADOR)	PROTECTION-DOIGTS 5132 GRIS (SANS PLIEUSE)
	407353	FINGER PROTECTION 5132P GRIS (WITH FOLDER)	GUARDAMANOS 5132P GRIS (CON PLEGADOR)	PROTECTION-DOIGTS 5132P GRIS (AVEC PLIEUSE)
	292938	FINGER PROTECTION 5115.RED (WITHOUT FOLDER)	GUARDAMANOS 5115 ROJO (SIN PLEGADOR)	PROTECTION-DOIGTS 5115.ROUGE (SANS PLIEUSE)
	292946	FINGER PROTECTION 5115P.RED (WITH FOLDER)	GUARDAMANOS 5115P ROJO (CON PLEGADOR)	PROTECTION-DOIGTS 5115P.ROUGE (AVEC PLIEUSE)
	292953	FINGER PROTECTION 5119 RED (WITHOUT FOLDER)	GUARDAMANOS 5119 ROJO (SIN PLEGADOR)	PROTECTION.DOIGTS 5119 ROUGE (SANS PLIEUSE)
	292961	FINGER PROTECTION 5119P RED (WITH FOLDER)	GUARDAMANOS 5119P ROJO (CON PLEGADOR)	PROTECTION-DOIGTS 5119P ROUGE (AVEC PLIEUSE)
	292979	FINGER PROTECTION 5125 RED (WITHOUT FOLDER)	GUARDAMANOS 5125 ROJO (SIN PLEGADOR)	PROTECTION-DOIGTS 5125 ROUGE (SANS PLIEUSE)
	292987	FINGER PROTECTION 5125P RED (WITH FOLDER)	UARDAMANOS 5125P ROJO (CON PLEGADOR)	PROTECTION-DOIGTS 5125P ROUGE (AVEC PLIEUSE)

Nº	REF	DENOMINATION	DENOMINACIÓN	DENOMINATION
	292995	FINGER PROTECTION 5132 RED (WITHOUT FOLDER)	GUARDAMANOS 5132 ROJO (SIN PLEGADOR)	PROTECTION-DOIGTS 5132 ROUGE (SANS PLIEUSE)
	293001	FINGER PROTECTION 5132P RED (WITH FOLDER)	GUARDAMANOS 5132P ROJO (CON PLEGADOR)	PROTECTION-DOIGTS 5132P ROUGE (AVEC PLIEUSE)
22	262121	FINGER-PROTECTION BRACKET	SOPORTE GUARDAMANOS	SUPPORT PROTECTION-DOIGTS
23	144782	INOX HEX SCREW DIN933 M 5X15	TOR.EX.DIN933INOX A2-70 M 5X15	VIS HEX INOX DIN933 M 5X15
24	149724	BICR EXT.TOOT.WASH.DIN6798 M5	ARAN.DEN.EXT.B.TRI.DIN6798M 5	RONDEL DEN.EX.BICR.DIN6798 M5
25	260224	FINGER PROTECTION FIXING-PIECE	FIJACION GUARDAMANOS	FIXATION PROTECTION-DOIGTS
26	144071	ALLEN BUMP DIN916 M6X12	ESP.ALL.DIN916-10.9 M 6X12	GOUJON ALLEN DIN916 M6X12
27	150227	BICR HEX NUT DIN934-8 M6	TUER.EX.DIN934-8 B.TRI.M 6	ECROU HEX DIN934-8 BICR.M6
28	272047	MICROSWITCH DRIVE	ACCIONADOR MICRORRUPTOR	ACTIONNEMENT MICRORRUPTEUR
29	273029	MICROSWITCH CIL.CAM	LEVA CILINDRICA MICRORRUPTOR	LEVE CIL.MICRORRUPTEUR
30	146290	BICR.HEX SCREW DIN933-8 M-5X20	TOR.EX.DIN933-8.8 B.TRI.M 5X20	VIS HEX BICR.DIN933-8.8 M-5X20
31	150177	BICR HEX NUT DIN934-8 M5	TUER.EX.DIN934-8 B.TRI.M 5	ECROU HEX DIN934-8 BIC.M5
32	279760	MICROSWITCH	MINIRRUPTOR	MICRORRUPTEUR
33	244327	MICROSWITCH ISOLATION	AISLANTE MICRORRUPTOR	ISOLANT MICRORRUPTEUR
34	277012	MICROSWITCH ISOLATION	AISLANTE MICRORRUPTOR	ISOLANT MICRORRUPTEUR
35	269688	MICROSWITCH BRACKET	SOPORTE MICRORRUPTOR	SUPPORT MICRORRUPTEUR
36	198762	BICR.CYL.SCREW DIN84-4,8 M3X30	TOR.CIL.DIN84-4.8B.TRI.M 3X30	VIS.CYL.DIN84-4,8 BICR.M3X30
37	192708	BICR.EXT.TOOT.WASH.DIN6798 M3	ARAN.DEN.EXTER.B.TRI.DIN6798M3	RONDEL.DEN.EX.BICR.DIN6798 M3
38	149906	INOX. HEX. NUT DIN 934 M-3	TUER.EX.DIN934 INOX A2-70 M 3	ECROU HEX. INOX DIN934 M-3
40	192302	CONNECTION ELEMENT	ELEMENTO CONEXION 3SB13 00-0C	ELEMENT CONNEXION
41	192310	MUSHROOM PUSH-BUTTON	PUL.HONGO ENCL.3SB10 (341529)	PULSATEUR TYPE COUP DE POING
42	192294	YELLOW RING	ARO AMARILLO	BAGUE JAUNE
43	149971	INOX. HEX. NUT DIN 934 M-6	TUER.EX.DIN934 INOX A2-70 M 6	ECROU HEX. INOX. DIN 934 M-6
44	273094	TIGHTENING ROLL END-PIECE	TOPE RODILLO TENSOR	ARRET ROULEAU TENDEUR
45	149682	BICR.EXT.TOOT.WASH.DIN6798 M12	ARAN.DEN.EXT.B.TRI.DIN6798M12	RONDEL.DEN.EX.BICR.DIN6798 M12
46	150235	BICR.HEX NUT DIN 934-8 M-12	TUER.EX.DIN934-8 B.TRI.M12	ECROU HEX DIN 934-8 BICR.M-12
48	420794	REAR PANEL FIXING	FIJACION TAPAS POSTERIORES	FIXATION COUVERCLES ARRIERES

Nº	REF	DENOMINATION	DENOMINACIÓN	DENOMINATION
49	191676	HEX SCREW 8G DIN933 M 8X 35	TOR.EX.DIN933-8.8 B.TRI.M 8X35	VIS HEX 8G DIN933 M 8X 35
50	149708	BICR.EXT.TOOT.WASH.DIN6798 M8	ARAN.DEN.EXT.B.TRI.DIN6798M 8	RONDEL.DEN.EX.BICR.DIN6798 M8
51	270074	WASHER 30X8,5X6	ARANDELA 30X8.5X6 TRIVALEN.	RONDELLE 30X8,5X6
52	149518	BICR.WASHER B DIN125-ST 8,4	ARAN.B DIN125-ST B.TRI. 8,4	RONDELLE.B DIN125-ST BICR.8,4
53	150201	BICR.HEX NUT DIN 934-8 M-8	TUER.EX.DIN934-8 B.TRI.M 8 .	ECROU HEX.DIN 934-8 BICR.M-8
54	275552	REAR PANEL (FOR 5115)	TAPA POSTERIOR (PARA 5115)	COUVERCLE ARRIERE (POUR 5115)
	275545	REAR PANEL (FOR 5119)	TAPA POSTERIOR (PARA 5119)	COUVERCLE ARRIERE (POUR 5119)
	275537	REAR PANEL (FOR 5125)	TAPA POSTERIOR (PARA 5125)	COUVERCLE ARRIERE (POUR 5125)
	270082	REAR PANEL (FOR 5132)	TAPA POSTERIOR (PARA 5132)	COUVERCLE ARRIERE (POUR 5132)
55	328245	SCREW AL.T25 AR.18ESTR.M 6X 10	TOR.ALOM.T25 AR.18ESTR.M 6X10*	VIS.ALOM.T25 AR.18ESTR.M 6X 10
56	268458	HANDLE	MANIVELA	MANIVELLE
57	263525	HANDLE BRACKET	SOPORTE MANIVELA	SUPPORT MANIVELLE
58	183400	CYL.PLATE SCREW ST-4 20 C/AL	TOR.CHAPA ST-4 20 C/AL.T25	VIS PLAQUE CYL.ST-4 20 C/AL
59	280834	TIGHTENING ROLL END-PIECE	TOPE RODILLO TENSOR	ARRET ROULEAU TENDEUR
60	147009	HEX SCREW 8G DIN 933 M-10X25	TOR.EX.DIN933-8.8 B.TRI.M10X25	VIS HEX. DIN 933 M-10X25 8G
61	115428	WASHER 30X10,5X3	ARANDELA 30X10,5X3 TRIVALEN.	RONDELLE 30X10,5X3
62	150193	BICR HEX NUT DIN 934-8 M10	TUER.EX.DIN934-8 B.TRI.M10	ECROU HEX DIN 934-8 BICR.M10

Nº	REF	DENOMINATION	DENOMINACIÓN	DENOMINATION
		FROM MACHINE Nr:	A PARTIR DE LA MAQUINA No :	A PARTIR DE LA MACHINE NR:
		615.025 620.233 625.165 630.313	615.025 620.233 625.165 630.313	615.025 620.233 625.165 630.313
25	132555	SAFETY WASHER 15 DIN 6799	ARANDELA SEGURIDAD 15 DIN 6799	RONDELLE SECURITE 15 DIN 6799

Nº	REF	DENOMINATION	DENOMINACIÓN	DENOMINATION
		FROM MACHINE Nr:	A PARTIR DE LA MAQUINA No :	A PARTIR DE LA MACHINE NR:
		615.016 620.123 625.086 630.157	615.016 620.123 625.086 630.157	615.016 620.123 625.086 630.157
40	192302	CANCELLED	ANULADO	ANNULE
41	192310	CANCELLED	ANULADO	ANNULE
63	341230	PS EMERGENCY STOP	PARO EMERGENCIA PS	ARRET EMERGENCE PS

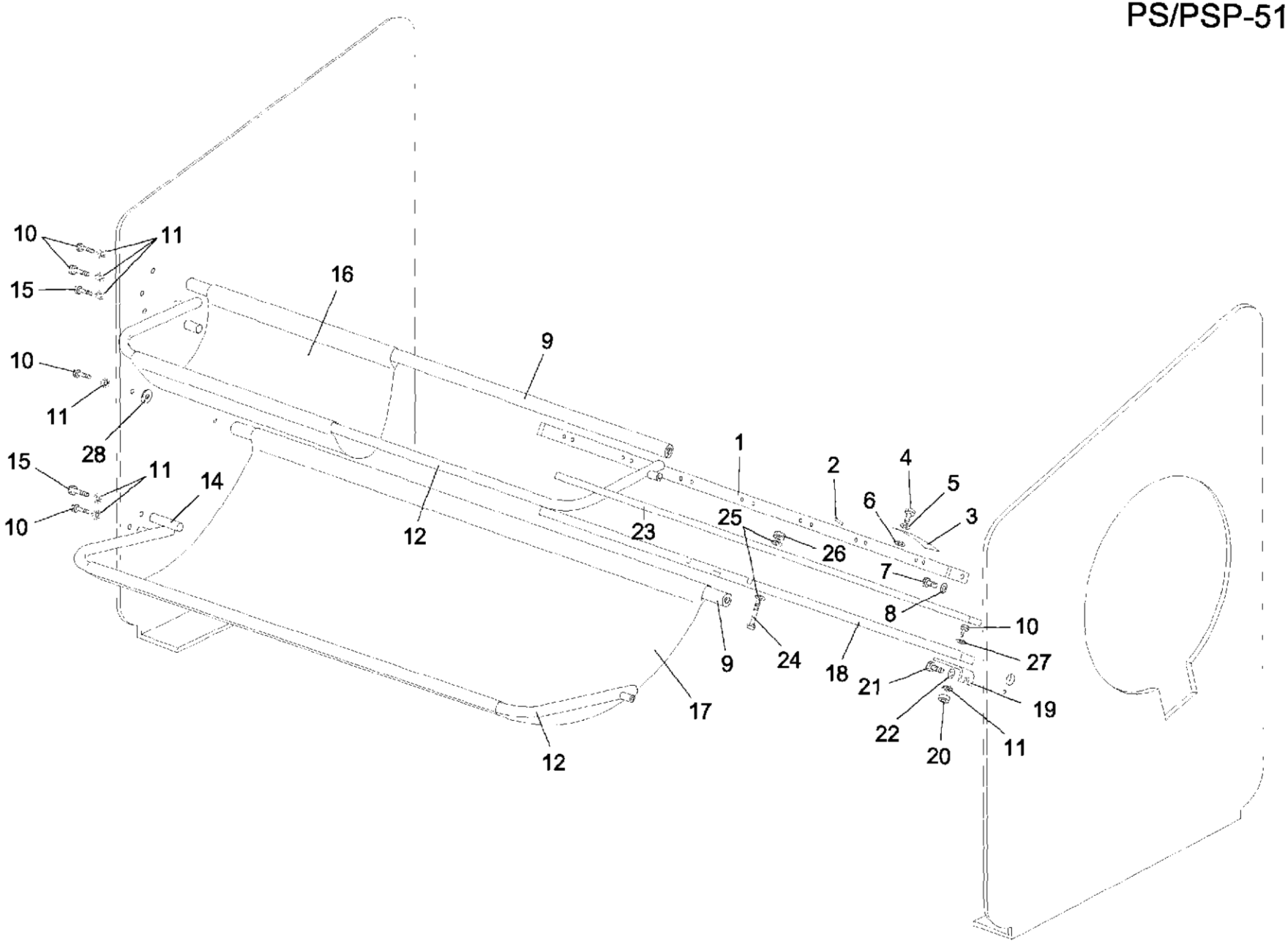
10
11
15
16
9
10
11
28
15
11
14
10
12
23
1
2
4
5
6
3
25
26
7
8
10
27
9
24
18
21
19
17
22
20
11
12

U.13071

Nº	REF	DENOMINATION	DENOMINACIÓN	DENOMINATION
1	273573	OUTLET SPRING BAR (FOR 5115)	BARRA MUELLES SALIDA (PARA 5115)	BARRE RESSORTS SORTIE (POUR 5115)
	273524	OUTLET SPRING BAR (FOR 5119)	BARRA MUELLES SALIDA (PARA 5119)	BARRE RESSORTS SORTIE (POUR 5119)
	273508	OUTLET SPRING BAR (FOR 5125)	BARRA MUELLES SALIDA (PARA 5125)	BARRE RESSORTS SORTIE (POUR 5125)
	269951	OUTLET SPRING BAR (FOR 5132)	BARRA MUELLES SALIDA (PARA 5132)	BARRE RESSORTS SORTIE (POUR 5132)
2	150888	FLEXIBLE PIN DIN1481 D6X15	PASADOR ELASTICO DIN1481 D6X15	GOUJON ELASTIQUE DIN1481 D6X15
3	192567	OUTLET SPRING	MUELLE SALIDA	RESSORT SORTIE
4	146258	BIC.HEX SCREW DIN933-4.8 M4X10	TOR.EX.DIN933-4.8 B.TRI.M 4X10	VIS HEX DIN933-4.8 BICR.M 4X10
5	149476	BICR.WASHER B DIN125-ST 4,3	ARAN.B DIN125-ST B.TRI. 4,3	RONDELLE B DIN125-ST BICR.4,3
6	302547	GASKET TEFLON D15 XD 7X1,5	JUNTA TEFLON D14XD4,5X1,5	JOINT TEFLON D15 XD 7X1,5
7	116764	HEX SCREW 8G DIN933 M-12X25	TOR.EX.DIN933-8.8 B.TRI.M12X25	VIS HEX. 8G DIN933 M-12X25
8	149682	BICR.EXT.TOOT.WASH.DIN6798 M12	ARAN.DEN.EXT.B.TRI.DIN6798M12	RONDEL.DEN.EX.BICR.DIN6798 M12
9	274407	AWNING BRACKET HOSE (FOR 5115)	TUBO SOPORTE LONA (PARA 5115)	TUBE SUPPORT BACHE (POUR 5115)
	274381	AWNING BRACKET HOSE (FOR 5119)	TUBO SOPORTE LONA (PARA 5119)	TUBE SUPPORT BACHE (POUR 5119)
	274365	AWNING BRACKET HOSE (FOR 5125)	TUBO SOPORTE LONA (PARA 5125)	TUBE SUPPORT BACHE (POUR 5125)
	270538	AWNING BRACKET HOSE (FOR 5132)	TUBO SOPORTE LONA (PARA 5132)	TUBE SUPPORT BACHE (POUR 5132)
10	146399	BICR HEX SCREW DIN933-8 M8X20	TOR.EX.DIN933-8.8 B.TRI.M 8X20	VIS HEX DIN933-8.8 BICR.M8X20
11	149708	BICR.EXT.TOOT.WASH.DIN6798 M8	ARAN.DEN.EXT.B.TRI.DIN6798M 8	RONDEL.DEN.EX.BICR.DIN6798 M8
12	273565	TRAY BAR (FOR 5115)	BARRA BANDEJA (PARA 5115)	BARRE PLATEAU (POUR 5115)
	273557	TRAY BAR (FOR 5119)	BARRA BANDEJA (PARA 5119)	BARRE PLATEAU (POUR 5119)
	273540	TRAY BAR (FOR 5125)	BARRA BANDEJA (PARA 5125)	BARRE PLATEAU (POUR 5125)
	269878	TRAY BAR (FOR 5132)	BARRA BANDEJA (PARA 5132)	BARRE PLATEAU (POUR 5132)
13	262667	TRAY BAR END-PIECE	TOPE BARRA BANDEJA	ARRET BARRE PLATEAU

Nº	REF	DENOMINATION	DENOMINACIÓN	DENOMINATION
14	262667	TRAY BAR END-PIECE (WITHOUT FOLDER)	TOPE BARRA BANDEJA (SIN PLEGADOR)	ARRET BARRE PLATEAU (SANS PLIEUSE)
	273086	TRAY BAR END-PIECE (WITH FOLDER)	TOPE BARRA BANDEJA (CON PLEGADOR)	ARRET BARRE PLATEAU (AVEC PLIEUSE)
15	192849	BIC.HEX SCREW DIN933-8 M-8X25	TOR.EX.DIN933-8.8 B.TRI.M 8X25	VIS HEX.DIN933-8,8 BICR.M-8X25
16	198648	TRAY AWNING (FOR 5115)	LONA BANDEJA * (PARA 5115)	BACHE PLATEAU (POUR 5115)
	198622	TRAY AWNING (FOR 5119)	LONA BANDEJA * (PARA 5119)	BACHE PLATEAU (POUR 5119)
	198606	TRAY AWNING (FOR 5125)	LONA BANDEJA * (PARA 5125)	BACHE PLATEAU (POUR 5125)
	197335	TRAY AWNING (FOR 5132)	LONA BANDEJA * (PARA 5132) .	BACHE PLATEAU (POUR 5132)
17	198630	TRAY AWNING (FOR 5115)	LONA BANDEJA * (PARA 5115)	BACHE PLATEAU (POUR 5115)
	198614	TRAY AWNING (FOR 5119)	LONA BANDEJA * (PARA 5119)	BACHE PLATEAU (POUR 5119)
	198598	TRAY AWNING (FOR 5125)	LONA BANDEJA * (PARA 5125)	BACHE PLATEAU (POUR 5125)
	192369	TRAY AWNING (FOR 5132)	LONA BANDEJA * (PARA 5132)	BACHE PLATEAU (POUR 5132)
18	274126	CELL BRACKET DUCT (FOR 5115)	CANAL SOPORTE CELULA (PARA 5115)	FOURREAU SUPPORT CELLULE (POUR 5115)
	274100	CELL BRACKET DUCT (FOR 5119)	CANAL SOPORTE CELULA (PARA 5119)	FOURREAU SUPPORT CELLULE (POUR 5119)
	274050	CELL BRACKET DUCT (FOR 5125)	CANAL SOPORTE CELULA (PARA 5125)	FOURREAU SUPPORT CELLULE (POUR 5125)
	272096	CELL BRACKET DUCT (FOR 5132)	CANAL SOPORTE CELULA (PARA 5132)	FOURREAU SUPPORT CELLULE (POUR 5132)
19	272088	CELL BAR BRACKET	SOPORTE BARRA CELULA	SUPPORT BARRE CELLULE
20	150201	BICR.HEX NUT DIN 934-8 M-8	TUER.EX.DIN934-8 B.TRI.M 8	ECROU HEX.DIN 934-8 BICR.M-8
21	146472	BICR HEX SCREW DIN933-8 M10X15	TOR.EX.DIN933-8.8 B.TRI.M10X15	VIS HEX BICR.DIN933-8 M 10X15
22	149500	BICR.WASHER B DIN125-ST 10,5	ARAN.B DIN125-ST B.TRI.10,5	RONDELLE B DIN125-ST BICR.10,5
23	274134	CELL BRACKET COVER (FOR 5115)	TAPA SOPORTE CELULA (PARA 5115)	COUVERCLE SUPPORT CELLULE (POUR 5115)

Nº	REF	DENOMINATION	DENOMINACIÓN	DENOMINATION
	274118	CELL BRACKET COVER (FOR 5119)	TAPA SOPORTE CELULA (PARA 5119)	COUVERCLE SUPPORT CELLULE (POUR 5119)
	274068	CELL BRACKET COVER (FOR 5125)	TAPA SOPORTE CELULA (PARA 5125)	COUVERCLE SUPPORT CELLULE (POUR 5125)
	272104	CELL BRACKET COVER (FOR 5132)	TAPA SOPORTE CELULA (PARA 5132)	COUVERCLE SUPPORT CELLULE (POUR 5132)
24	146357	BIC HEX SCREW DIN933-8.8 M6X45	TOR.EX.DIN933-8.8 B.TRI.M 6X45	VIS HEX DIN933-8.8 BICR.M 6X45
25	149526	BICR.WASHER B DIN125-ST 6,4	ARAN.B DIN125-ST B.TRI. 6,4	RONDELLE B DIN125-ST BICR.6,4
26	150227	BICR HEX NUT DIN934-8 M6	TUER.EX.DIN934-8 B.TRI.M 6	ECROU HEX DIN934-8 BICR.M6
27	149518	BICR.WASHER B DIN125-ST 8,4	ARAN.B DIN125-ST B.TRI. 8,4	RONDELLE.B DIN125-ST BICR.8,4
28	261529	WASHER 25X8,5X4	ARANDELA 25X8.5X4 TRIVALEN.	RONDELLE 25X8,5X4

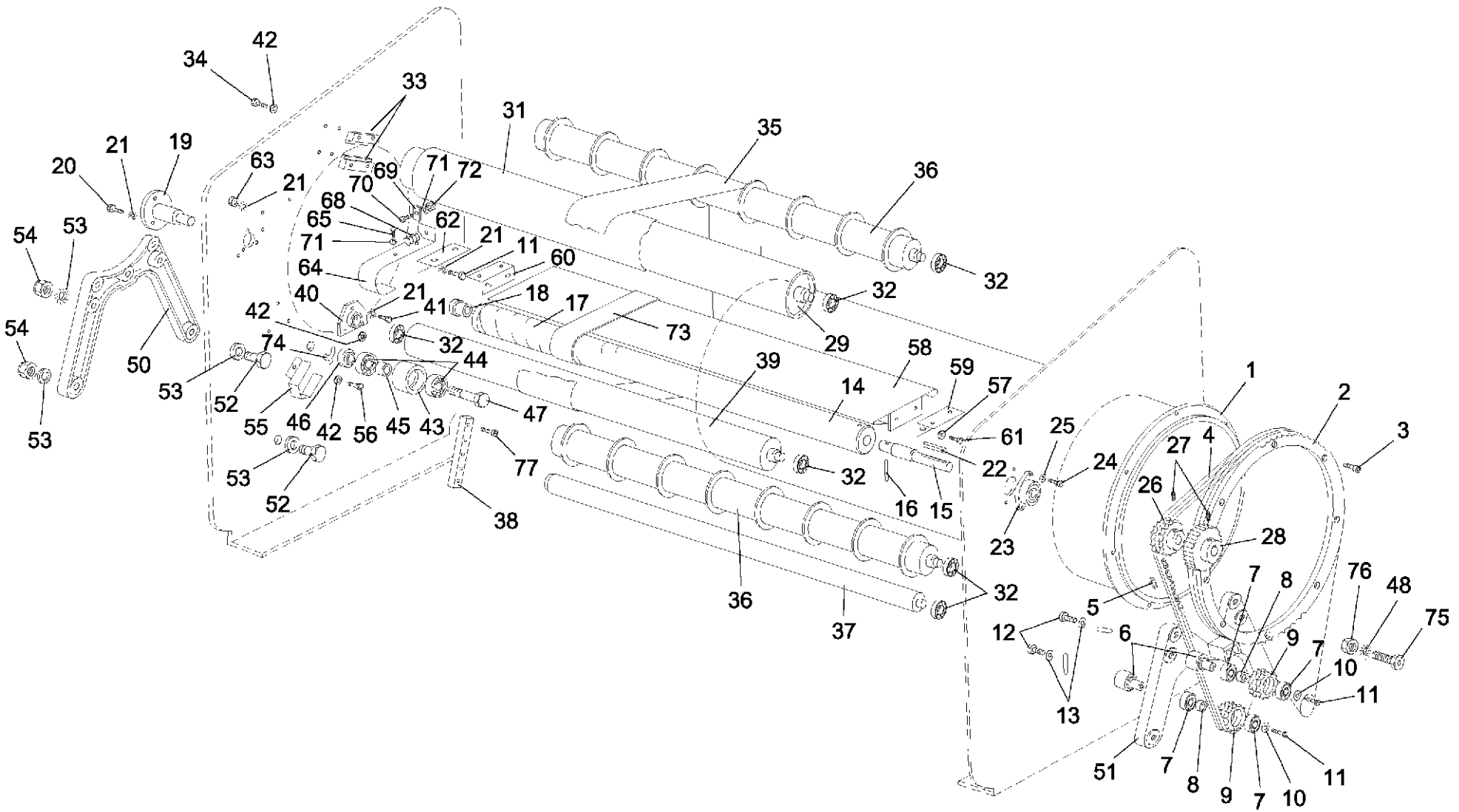
34
42
33
31
35
36
20
21
19
63
21
69
71
72
70
68
65
62
71
21
11
60
64
54
53
40
21
41
18
17
73
32
32
29
42
74
32
44
39
58
59
57
14
1
2
3
54
50
53
52
55
46
42
56
45
43
47
61
25
24
27
4
26
22
53
53
52
77
32
16
15
23
28
38
36
37
32
5
7
8
76
48
75
12
6
9
7
10
11
13
51
7
8
9
7
10
11

U.13072

Nº	REF	DENOMINATION	DENOMINACIÓN	DENOMINATION
1	275966	CHROMED CYLINDER SET (FOR 5115) FOR ELECTRICAL AND GAS HEATING	CONJUNTO CILINDRO (CROMADO) (PARA 5115) PARA CALEFACCION ELECTR.Y GAS	ENSEMBLE CYLINDRE (CHROME) (POUR 5115) POUR CHAUFAGE ELECTRIQ.ET GAZ
	275974	CHROMED CYLINDRE SET (FOR 5119) FOR ELECTRICAL AND GAS HEATING	CONJUNTO CILINDRO (CROMADO) (PARA 5119) PARA CALEFACCION ELECTR.Y GAS	ENSEMBLE CYLINDRE (CHROME) (POUR 5119) POUR CHAUFAGE ELECTRIQ.ET GAZ
	275982	CHROMED CYLINDER SET (FOR 5125) FOR ELECTRICAL AND GAS HEATING	CONJUNTO CILINDRO (CROMADO) (PARA 5125) PARA CALEFACCION ELECTR.Y GAS	ENSEMBLE CYLINDRE (CHROME) (POUR 5125) POUR CHAUFAGE ELECTRIQ.ET GAZ
	275990	CHROMED CYLINDER SET (FOR 5132) FOR ELECTRICAL AND GAS HEATING	CONJUNTO CILINDRO (CROMADO) (PARA 5132) PARA CALEFACCION ELECTR.Y GAS	ENSEMBLE CYLINDRE (CHROME) (POUR 5132) POUR CHAUFAGE ELECTRIQ.ET GAZ
2	191486	TOOTHED CROWN	CORONA DENTADA	COURONNE DENTÉE
3	144451	ALLEN SCREW DIN912 M10X20	TOR.ALLDIN912-8.8 B.TRI.M10X20	VIS ALLEN DIN912 M10X20
4	155309	DUPLEX CHAIN 1/2"X5/16" (1 METER)	CADENA DUPLEX 1/2"X5/16" (1 METRO)	CHAINE DUPLEX 1/2"X5/16" (1 METRE)
5	155556	DUPLEX STRAIGHT UNION 1/2"	UNION RECTA DUPLEX 1/2"	UNION DROITE DUPLEX 1/2"
6	269340	PINION SHAFT	MUÑON PIÑON	AXE PIGNON
7	128504	BEARING 6004 2RS	RODAMIENTO 6004-2RS	ROULEMENT 6004 2RS
8	269365	SEPARATOR 27X21X11	SEPARADOR 27X21X11	SEPARATEUR 27X21X11
9	269332	PINION TIGHTENER	PIÑON TENSOR	PIGNON TENDEUR
10	261529	WASHER 25X8,5X4	ARANDELA 25X8.5X4 TRIVALEN.	RONDELLE 25X8,5X4
11	192849	BIC.HEX SCREW DIN933-8 M-8X25	TOR.EX.DIN933-8.8 B.TRI.M 8X25	VIS HEX.DIN933-8,8 BICR.M-8X25
12	175786	BIC.HEX SCREW DIN933-8.M16X40	TOR.EX.DIN933-8.8 B.TRI.M16X40	VIS HEX.DIN933-8,8 BICR M16X40
13	200626	WASHER 50X17X9	ARANDELA 50X17X9 TRIVALEN.	RONDELLE 50X17X9
14	274092	CLOTH INLET ROLL (SHAFT INCLUDED) (FOR 5115)	RODILLO ENTRADA ROPA (INCLUYE EJE) (PARA 5115)	ROULEAU ENTREE LINGE (COMPRIS AXE) (POUR 5115)
	274084	CLOTH INLET ROLL (SHAFT INCLUDED) (FOR 5119)	RODILLO ENTRADA ROPA (INCLUYE EJE) (PARA 5119)	ROULEAU ENTREE LINGE (COMPRIS AXE) (POUR 5119)
	274076	CLOTH INLET ROLL (SHAFT INCLUDED) (FOR 5125)	RODILLO ENTRADA ROPA (INCLUYE EJE) (PARA 5125)	ROULEAU ENTREE LINGE (COMPRIS AXE) (POUR 5125)
	269001	CLOTH INLET ROLL (SHAFT INCLUDED) (FOR 5132)	RODILLO ENTRADA ROPA (INCLUYE EJE) (PARA 5132)	ROULEAU ENTREE LINGE (COMPRIS AXE) (POUR 5132)

Nº	REF	DENOMINATION	DENOMINACIÓN	DENOMINATION
15	269050	CLOTH INLET SHAFT	EJE ENTRADA ROPA	AXE ENTREE LINGE
16	196451	FLEXIBLE PIN DIN1481 D8X60	PASADOR ELASTICO DIN1481 D8X60	GOUJON ELASTIQUE DIN1481 D8X60
17	332866	ADHESIVE POLY RIBBON 50X1.8MM (1 METER)	CINTA POLY-SIL ADHESI.50X1.8MM (1 METRO)	SANGLE POLY-SIL ADHES.50X1.8MM (1 METRE)
	151993	ADHESIVE FABRIC 50X19 (1 COIL)	TEJIDO VISCOSILLA AUTOAD.50X19 (1 ROLLO)	TISSU ADHÉSIF 50X19 (1 ROULEAU)
18	128983	SELFOIL SLEEVE B11B20-28-25/35	COJ. SELFOIL B11B20-28-25/35-4	FRETTE SELFOIL B11B20-28-25/35
19	269233	CLOTH INLET ROLL SHAFT	MUÑON RODILLO ENTRADA ROPA	AXE ROULEAU ENTREE LINGE
20	146399	BICR HEX SCREW DIN933-8 M8X20	TOR.EX.DIN933-8.8 B.TRI.M 8X20	VIS HEX DIN933-8.8 BICR.M8X20
21	149708	BICR.EXT.TOOT.WASH.DIN6798 M8	ARAN.DEN.EXT.B.TRI.DIN6798M 8	RONDEL.DEN.EX.BICR.DIN6798 M8
22	198309	PIN DIN 6885-A 100X8X7	CHAVETA DIN 6885-A 100X 8X7	CLAVETTE DIN 6885-A 100X8X7
23	198218	CLAMP BRACKET ATM UCFL-25	SOPORTE BRIDA ATM UCFL-25	SUPPORT BRIDE ATM UCFL-25
24	146480	BICR.HEX SCREW DIN933-8 M10X20	TOR.EX.DIN933-8.8 B.TRI.M10X20	VIS HEX BICR.DIN933-8 M 10X20
25	149500	BICR.WASHER B DIN125-ST 10,5	ARAN.B DIN125-ST B.TRI.10,5	RONDELLE B DIN125-ST BICR.10,5
26	269266	CLOTH INLET ROLL PINION	PIÑON RODILLO ENTRADA ROPA	PIGNON ROULEAU ENTREE LINGE
27	144113	ALLEN BUMP DIN 916 M-6X20	ESP.ALL.DIN916-10.9 M 6X20	GOUJON ALLEN DIN 916 M-6X20
28	269274	CLOTH INLET PINION	PIÑON ENTRADA ROPA	PIGNON ENTREE LINGE
29	273979	UPPER ROLL (FOR 5115)	RODILLO SUPERIOR (PARA 5115)	ROULEAU SUPERIEUR (POUR 5115)
	273953	UPPER ROLL (FOR 5119)	RODILLO SUPERIOR (PARA 5119)	ROULEAU SUPERIEUR (POUR 5119)
	273938	UPPER ROLL (FOR 5125)	RODILLO SUPERIOR (PARA 5125)	ROULEAU SUPERIEUR (POUR 5125)
	269191	UPPER ROLL (FOR 5132)	RODILLO SUPERIOR (PARA 5132)	ROULEAU SUPERIEUR (POUR 5132)
31	198366	NOMEX FELT 600G 2,01X1,593 (FOR 5115)	MULET.NOMEX 600GR.2,010X1,593* (PARA 5115)	MOLLETON NOMEX 600G 2,01X1,593 (POUR 5115)
	198358	NOMEX FELT 600G 2,01X2,015 (FOR 5119)	MULET.NOMEX 600GR.2,010X2,015* (PARA 5119)	MOLLETON NOMEX 600G 2,01X2,015 (POUR 5119)
	198341	NOMEX FELT 600G 2,01X2,648 (FOR 5125)	MULET.NOMEX 600GR.2,010X2,648* (PARA 5125)	MOLLETON NOMEX 600G 2,01X2,648 (POUR 5125)
	198333	NOMEX FELT 600G 2,01X3,281 (FOR 5132)	MULET.NOMEX 600GR.2,010X3,281* (PARA 5132)	MOLLETON NOMEX 600G 2,01X3,281 (POUR 5132)

Nº	REF	DENOMINATION	DENOMINACIÓN	DENOMINATION
	149062	GAMMA ADHESIVE 3085/25 (5 L.)	ADHESIVO GAMMA 3088/25 LATA 5L	ADHESIVE GAMMA 3085/25 (5 L.)
32	142828	SPECIAL BEARING	RODAMIENTO ESPECIAL	ROULEMENT SPECIAL
33	269704	ROLL GUIDE	GUIA RODILLO	GUIDE ROULEAU
34	192849	BIC.HEX SCREW DIN933-8 M-8X25	TOR.EX.DIN933-8.8 B.TRI.M 8X25	VIS HEX.DIN933-8,8 BICR.M-8X25
35	195826	IRONING STRAP	BANDA PLANCHADO	BANDE REPASSAGE
	302539	PIN 213MM.	PASADOR ROJO PARA BANDA 213MM.	GOUJON 213MM.
36	275396	REAR ROLL (FOR 5115)	RODILLO POSTERIOR (PARA 5115)	ROULEAU ARRIERE (POUR 5115)
	275388	REAR ROLL (FOR 5119)	RODILLO POSTERIOR (PARA 5119)	ROULEAU ARRIERE (POUR 5119)
	275370	REAR ROLL (FOR 5125)	RODILLO POSTERIOR (PARA 5125)	ROULEAU ARRIERE (POUR 5125)
	269431	REAR ROLL (FOR 5132)	RODILLO POSTERIOR (PARA 5132)	ROULEAU ARRIERE (POUR 5132)
37	275610	TIGHTENING ROLL (FOR 5115)	RODILLO TENSOR (PARA 5115)	ROULEAU TENDEUR (POUR 5115)
	275602	TIGHTENING ROLL (FOR 5119)	RODILLO TENSOR (PARA 5119)	ROULEAU TENDEUR (POUR 5119)
	275594	TIGHTENING ROLL (FOR 5125)	RODILLO TENSOR (PARA 5125)	ROULEAU TENDEUR (POUR 5125)
	259911	TIGHTENING ROLL (FOR 5132)	RODILLO TENSOR (PARA 5132)	ROULEAU TENDEUR (POUR 5132)
38	269696	ROLL GUIDE	GUIA RODILLO	GUIDE ROULEAU
39	273680	LOWER ROLL (FOR 5115)	RODILLO INFERIOR (PARA 5115)	ROULEAU INFERIEUR (POUR 5115)
	273672	LOWER ROLL (FOR 5119)	RODILLO INFERIOR (PARA 5119)	ROULEAU INFERIEUR (POUR 5119)
	273664	LOWER ROLL (FOR 5125)	RODILLO INFERIOR (PARA 5125)	ROULEAU INFERIEUR (POUR 5125)
	269290	LOWER ROLL (FOR 5132)	RODILLO INFERIOR (PARA 5132)	ROULEAU INFERIEUR (POUR 5132)
40	269712	ROLL BRACKET	SOPORTE RODILLOS	SUPPORT ROULEAU
41	166652	BIC.HEX SCREW DIN933-8.8 M8X15	TOR.EX.DIN933-8.8 B.TRI.M 8X15	VIS HEX DIN933-8.8 BICR. M8X15
42	149518	BICR.WASHER B DIN125-ST 8,4	ARAN.B DIN125-ST B.TRI. 8,4	RONDELLE.B DIN125-ST BICR.8,4

Nº	REF	DENOMINATION	DENOMINACIÓN	DENOMINATION
43	192351	BEARING SLEEVE	CASQUILLO RODAMIENTO	FRETTE ROULEMENT
44	197293	SPECIAL BEARING	RODAMIENTO ESPECIAL	ROULEMENT SPECIAL
45	259929	SEPARATOR 28X20X15	SEPARADOR 28X20X15	SEPARATEUR 28X20X15
46	259937	SEPARATOR 45X21X9	SEPARADOR 45X21X9	SEPARATEUR 45X21X9
47	305227	BEARINGS BOLT	BULON RODAMIENTOS	BOULON ROULEMENTS
48	149641	BICR.EXT.TOOT.WASH.DIN6798 M20	ARAN.DEN.EXT.B.TRI.DIN6798M20	RONDEL.DEN.EX.BICR.DIN6798 M20
50	289272	LEFT BASE RENFORT	REFUERZO BANCADA IZQUIERDA	REFORT BATI GAUCHE
51	289231	RIGHT BASE RENFORT	REFUERZO BANCADA DERECHA	REFORT BATI DROIT
52	147082	HEX SCREW 8G DIN933 M16X60	TOR.EX.DIN933-8.8 B.TRI.M16X60	VIS HEX. 8G DIN933 M16X60
53	149385	BICR.WASHER B DIN125-ST 17	ARAN.B DIN125-ST B.TRI.17	RONDELLE B DIN125-ST BICR.17
54	150276	BICR HEX.NUT DIN934-8 M-16	TUER.EX.DIN934-8 B.TRI.M16	ECROU HEX.DIN934-8 BICR M-16
55	273045	SLEEVE PROTECTION (WITHOUT FOLDER)	PROTECCION CASQUILLOS (SIN PLEGADOR)	PROTECTION FRETTE (SANS PLIEUSE)
56	146373	BICR.HEX SCREW DIN933-8 M 8X10	TOR.EX.DIN933-8.8 B.TRI.M 8X10	VIS HEX BICR.DIN933-8.8 M 8X10
57	149526	BICR.WASHER B DIN125-ST 6,4	ARAN.B DIN125-ST B.TRI. 6,4	RONDELLE B DIN125-ST BICR.6,4
58	275206	CLOTH INLET (FOR 5115)	ENTRADA ROPA (PARA 5115)	ENTREE LINGE (POUR 5115)
	275180	CLOTH INLET (FOR 5119)	ENTRADA ROPA (PARA 5119)	ENTREE LINGE (POUR 5119)
	275164	CLOTH INLET (FOR 5125)	ENTRADA ROPA (PARA 5125)	ENTREE LINGE (POUR 5125)
	268821	CLOTH INLET (FOR 5132)	ENTRADA ROPA (PARA 5132)	ENTREE LINGE (POUR 5132)
59	273060	INLET SUPPORT RIGHT	APOYO DERECHO ENTRADA	APPUI DROIT ENTREE
60	271718	INLET SUPPORT LEFT	APOYO IZQUIERDO ENTRADA	APPUI GAUCHE ENTREE
61	146233	BICR.HEX SCREW DIN933-8 M6X15	TOR.EX.DIN933-8.8 B.TRI.M 6X15	VIS HEX DIN933-8.8 BICR.M6X15
62	268854	CLOTH INLET BRACKET	SOPORTE ENTRADA ROPA	SUPPORT ENTREE LINGE
63	150201	BICR.HEX NUT DIN 934-8 M-8	TUER.EX.DIN934-8 B.TRI.M 8	ECROU HEX.DIN 934-8 BICR.M-8
64	268938	SIDE PROTECTION	PROTECCION LATERAL	PROTECTION LATERALE
65	145367	INOX SCREW DIN85 M6X20 A2-70	TOR.PLA.DIN85 INOX A2-70 M6X20	VIS INOX DIN85 M6X20 A2-70
68	196303	FINGER PROTECTION SPRING	MUELLE GUARDAMANOS	RESSORT PROTECTION DOIGTS

Nº	REF	DENOMINATION	DENOMINACIÓN	DENOMINATION
69	268987	FINGERS PROTECT.SPRING FIXING	SUJECCION MUELLE GUARDAMANOS	FIXATION RESSORT PROTECT.DOIGT
70	145813	SCREW DIN85 INOX A2-70 M 6X12	TOR.PLA.DIN85 INOX A2-70 M6X12	VIS P.DIN85 INOX A2-70 M 6X12
71	149716	BICR.EXT TOOT.WASH.DIN6798 M6	ARAN.DEN.EXT.B.TRI.DIN6798M 6	RONDEL.DEN.EX.BICR DIN6798 M6
72	149971	INOX. HEX. NUT DIN 934 M-6	TUER.EX.DIN934 INOX A2-70 M 6	ECROU HEX. INOX. DIN 934 M-6
73	195263	CLOTH INLET BAND	BANDA ENTRADA ROPA	BANDE ENTREE LINGE
74	281857	MILLSTONE 0,1	GRUESO 0,1	JAUGE 0,1
75	289207	PROTECTION LID SCREW	TORNILLO TAPA PROTECCION	VIS COUVERCLE PROTECTION
76	150268	BICR.HEX NUT DIN934-8 M 20	TUER.EX.DIN934-8 B.TRI.M20	ECROU HEX.BICR.DIN934-8 M 20
77	144394	ALLEN SCREW DIN912 M8X20	TOR.ALLDIN912-8.8 B.TRI.M 8X20	VIS ALLEN DIN912 M8X20

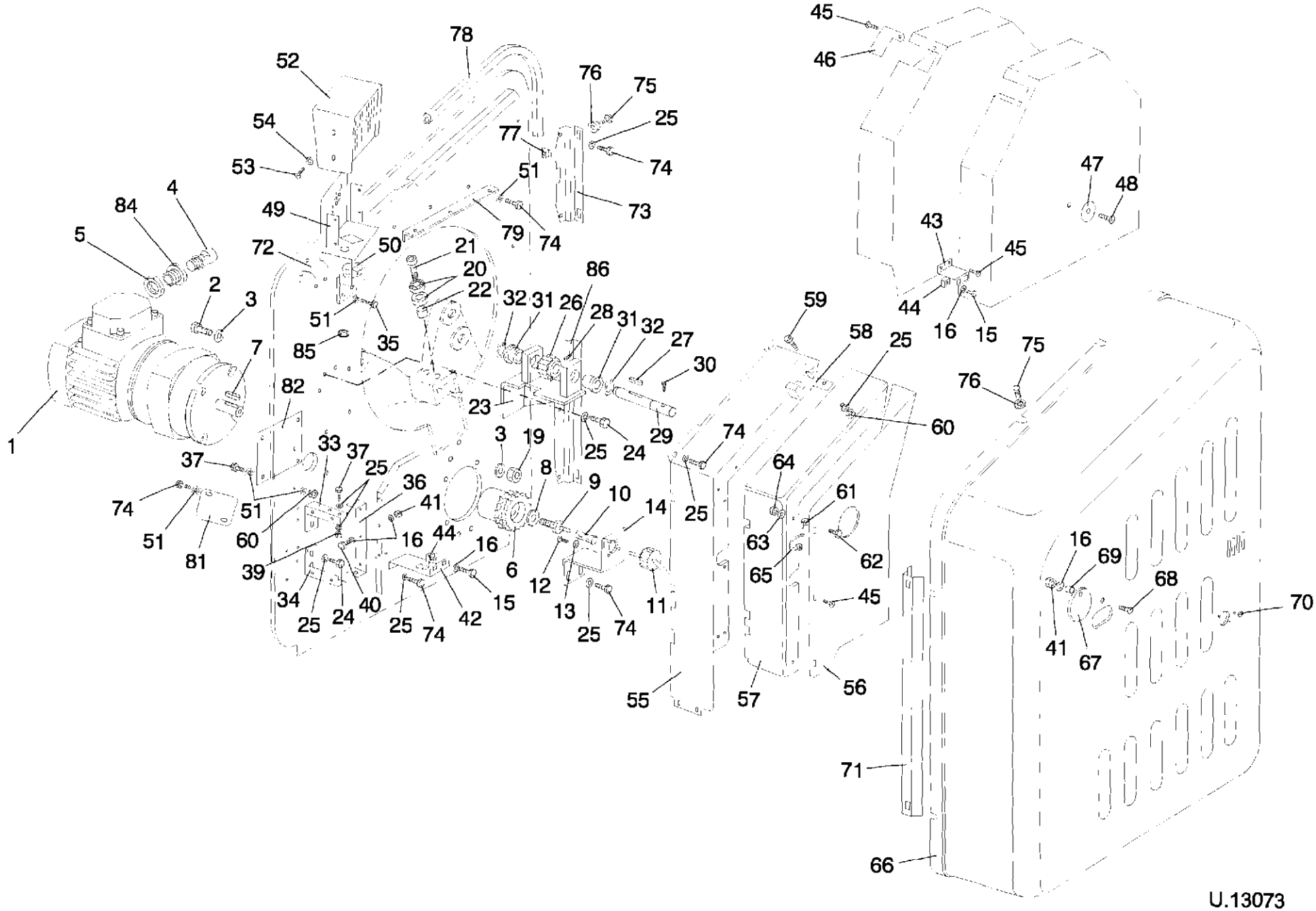
1
2
3
4
5
6
7
8
9
10
11
12
13
14
15
16
19
20
21
22
23
24
25
26
27
28
29
30
31
32
33
34
35
36
37
39
40
41
42
43
44
45
46
47
48
49
50
51
52
53
54
55
56
57
58
59
60
61
62
63
64
65
66
67
68
69
70
71
72
73
74
75
76
77
78
79
81
82
84
85
86
U.13073

Nº	REF	DENOMINATION	DENOMINACIÓN	DENOMINATION
1	305474	MOTOR-REDUCER MR 3I 50 FC1A	MOTO-REDUCTOR MR 3I 50 FC1A *	MOTO-REDUCTEUR MR 3I 50 FC1A
2	147074	HEX SCREW 8G DIN 933 M12X40	TOR.EX.DIN933-8.8 B.TRI.M12X40	VIS HEX. 8G DIN 933 M12X40
3	149419	BICR.WASHER B DIN125-ST 13	ARAN.B DIN125-ST B.TRI.13	RONDELLE B DIN125-ST BICR.13
4	197418	STUFFING-BOX EXAD.CLAMP PG16	PRENSAE.EXAD.BRIDA 81604 PG16*	PRESSE-ETOUPES EXAD.BRIDE PG16
5	140244	NUT PG-13,5	TUERCA PG 281304 PG-13,5	ECROU PRESSE-ETOUPE PG-13,5
6	196360	MOTOR PINION	PIÑON MOTOR	PIGNON MOTEUR
7	307611	PIN DIN 6885-A 45X 8X 7	CHAVETA DIN 6885-A 45X 8X7	CLAVETTE DIN 6885-A 45X 8X 7
8	111278	WASHER 35X9X4	ARANDELA 35X9X4 TRIVALEN.	RONDELLE 35X9X4
9	287896	REDUCER SHAFT SCREW	TORNILLO EJE REDUCTOR	VIS AXE REDUCTEUR
10	273367	ENCODER COUPLING	ACOPLAMIENTO ELASTICO ENCODER	ASSAMBLAGE ENCODER
11	197285	ENCODER 60 P/REVOLUTION	ENCODER 60 P/VUELTA *	ENCODER 60 P/TOUR
12	146027	BICR CYL SCREW DIN84-4 M 3X 7	TOR.CIL.DIN84-4.8 B.TRI.M 3X7	VIS CYL BICR DIN84-4.8 M 3X 7
13	192708	BICR.EXT.TOOT.WASH.DIN6798 M3	ARAN.DEN.EXTER.B.TRI.DIN6798M3	RONDEL.DEN.EX.BICR.DIN6798 M3
14	273128	ENCODER BRACKET	SOPORTE ENCODER	SUPPORT ENCODER
15	165621	BIC HEX SCREW DIN933-8,8 M6X10	TOR.EX.DIN933-8.8 B.TRI.M 6X10	VIS HEX DIN933-8,8 BICR M6X10
16	149526	BICR.WASHER B DIN125-ST 6,4	ARAN.B DIN125-ST B.TRI. 6,4	RONDELLE B DIN125-ST BICR.6,4
19	150235	BICR.HEX NUT DIN 934-8 M-12	TUER.EX.DIN934-8 B.TRI.M12	ECROU HEX DIN 934-8 BICR.M-12
20	142828	SPECIAL BEARING	RODAMIENTO ESPECIAL	ROULEMENT SPECIAL
21	276394	BEARING BOLT	BULON RODAMIENTOS	BOULON ROULEMENT
22	269597	SEPARATOR 1/2"X16,1X22	SEPARADOR 1/2"X16,1X22	SEPARATEUR 1/2"X16,1X22
23	269399	HANDLE SHAFT BRACKET	SOPORTE EJE MANIVELA	SUPPORT AXE MANIVELLE
24	166652	BIC.HEX SCREW DIN933-8.8 M8X15	TOR.EX.DIN933-8.8 B.TRI.M 8X15	VIS HEX DIN933-8.8 BICR. M8X15
25	149518	BICR.WASHER B DIN125-ST 8,4	ARAN.B DIN125-ST B.TRI. 8,4	RONDELLE.B DIN125-ST BICR.8,4
26	269472	MOVING PINION	PIÑON MOTRIZ	PIGNON MOTRICE
27	196436	PIN DIN 6885-A 40X6X6	CHAVETA DIN 6885-A 40X 6X6	CLAVETTE DIN 6885-A 40X6X6
28	184176	ALLEN BUMP DIN916 M5X6	ESP.ALL.DIN916-10.9 M 5X 6	GOUJON ALLEN DIN916 M5X6
29	269480	HANDLE SHAFT	EJE MANIVELA	AXE MANIVELLE
30	144279	ALLEN SCREW DIN 912 M-5X15	TOR.ALLDIN912-8.8 B.TRI.M 5X15	VIS ALLEN DIN 912 M-5X15

Nº	REF	DENOMINATION	DENOMINACIÓN	DENOMINATION
31	128983	SELFOIL SLEEVE B11B20-28-25/35	COJ. SELFOIL B11B20-28-25/35-4	FRETTE SELFOIL B11B20-28-25/35
32	196444	FLEXIBLE RING E-20 DIN 471	ANILLO ELASTICO E-20 DIN 471	BAGUE ELASTIQUE E-20 DIN 471
33	271965	INSTALLATION BOX BRACKET	SOPORTE CAJA INSTALACION	SUPPORT BOITE INSTALLATION
34	273235	INSTALLATION BOX BRACKET	SOPORTE CAJA INSTALACION	SUPPORT BOITE INSTALLATION
36	270702	BOX BRACKET HINGE	CHARNELA CAJA INSTALACION	CHARNIERE BOITE INSTALLATION
37	192849	BIC.HEX SCREW DIN933-8 M-8X25	TOR.EX.DIN933-8.8 B.TRI.M 8X25	VIS HEX.DIN933-8,8 BICR.M-8X25
39	164285	SELFBLOCKING NUT DIN985 M-8	TUER.AUTOBL.DIN985-8 B.TRI.M8	ECROU AUTOBLOCANT DIN985 M-8
40	146233	BICR.HEX SCREW DIN933-8 M6X15	TOR.EX.DIN933-8.8 B.TRI.M 6X15	VIS HEX DIN933-8.8 BICR.M6X15
41	150227	BICR HEX NUT DIN934-8 M6	TUER.EX.DIN934-8 B.TRI.M 6	ECROU HEX DIN934-8 BICR.M6
42	270736	BOX BRACKET SUPPORT	APOYO CAJA INSTALACION	APPUI BOITE INSTALLATION
43	270728	BOX BRACKET SUPPORT	APOYO CAJA INSTALACION	APPUI BOITE INSTALLATION
44	165019	CAGED NUT M-6 0,5-1,5 R.310007-9	TUER.ENJ.M6 0,5-1,5 R.310007-9	ECROU PRESIONER M-6 0,5-1,5 R.310007-9
45	183400	CYL.PLATE SCREW ST-4 20 C/AL	TOR.CHAPA ST-4 20 C/AL.T25	VIS PLAQUE CYL.ST-4 20 C/AL
46	259374	CHAIN COVER	TAPA CADENA	COUVERCLE CHAINE
47	222166	WASHER 60X4.5X1	ARANDELA 60X4.5X1 ACERO	RONDELLE 60X4.5X1
48	195552	PLATE SCREW DIN7971 8X3/4"	TOR.CHAPA CILI.DIN7971 8X3/4"	VIS DE PLAQUE DIN7971 8X3/4"
49	259341	CONTROL BOX	CAJA DE MANDOS	BOITES DE COMMANDES
50	292383	CERAMIC FIBER	FIBRA CERAMICA (60X100 MM.)	FIBRE CERAMIQUE
51	149708	BICR.EXT.TOOT.WASH.DIN6798 M8	ARAN.DEN.EXT.B.TRI.DIN6798M 8	RONDEL.DEN.EX.BICR.DIN6798 M8
52	271775	BOX COVER	TAPA CAJA	COUVERCLE BOITE
53	145664	INOX FLAT SCREW DIN85 M 4X8	TOR.PLA.DIN85 INOX A2-70 M4X 8	VIS PLAT INOX DIN85 M 4X8
54	149328	INOX A2 WASHER DIN 125 4,3	ARAN. DIN125 INOX A2 4,3	RONDELLE INOX A2 DIN 125 4,3
55	273201	TRANSMISSION PROTECTION	PROTECCION TRANSMISION	PROTECTION TRANSMISSION
56	273219	TRANSMISSION COVER	TAPA TRANSMISION	COUVERCLE TRANSMISSION
57	198168	PROTECTION ISOLATION	AISLANTE PROTECCION	ISOLANT PROTECTION
58	264598	THERMOSTAT BRACKET	SOPORTE TERMOSTATO	SUPPORT THERMOSTAT
59	146399	BICR HEX SCREW DIN933-8 M8X20	TOR.EX.DIN933-8.8 B.TRI.M 8X20	VIS HEX DIN933-8.8 BICR.M8X20
60	150201	BICR.HEX NUT DIN 934-8 M-8	TUER.EX.DIN934-8 B.TRI.M 8	ECROU HEX.DIN 934-8 BICR.M-8

Nº	REF	DENOMINATION	DENOMINACIÓN	DENOMINATION
61	199232	BASE UNEX 1252	BASE ROSCABLE PARA BRIDA 1252*	BASE UNEX 1252
62	199240	BICR.SCREW DIN963-4.8 M4X30	TOR.AV.DIN963-4.8 B.TRI M 4X30	VIS T/FRAIS.DIN963-4 BIC.M4X30
63	149476	BICR.WASHER B DIN125-ST 4,3	ARAN.B DIN125-ST B.TRI. 4,3	RONDELLE B DIN125-ST BICR.4,3
64	150185	BICR.HEX.NUT DIN934-8 M4	TUER.EX.DIN934-8 B.TRI.M 4	ECROU HEX.DIN934-8 BICR.M4
65	140525	CLAMP 2244-0	BRIDA UNEX 2244-0 *	BRIDE 2244-0
66	274993	RIGHT SIDE PANNEL	TAPA LATERAL DERECHA (319194)	COUVERCLE LATERAL DROIT
67	262873	HANDLE INLET LID	TAPA ENTRADA MANIVELA	COUVERCLE ENTREE MANIVELLE
68	145367	INOX SCREW DIN85 M6X20 A2-70	TOR.PLA.DIN85 INOX A2-70 M6X20	VIS INOX DIN85 M6X20 A2-70
69	189696	SELFOIL SLEEVE B11A 6-10-5	COJ. SELFOIL B11A 6-10- 5	FRETTE SELFOIL B11A 6-10-5
70	199455	EYELET Nº 23 (FOR MACHINES ELECTR.HEATING)	OJETE N23 LAT.NIQU.LARGO 6.5MM (PARA MODELOS CALEFAC.ELECTR.)	OEILLET Nº 23 (POUR MACHINES CHAUF.ELECTR.)
71	270116	LID FIXING PROFILE	PERFIL FIJACION TAPAS	PROFILE FIXATION COUVERCLES
72	270108	LID FIXING PROFILE	PERFIL FIJACION TAPAS	PROFILE FIXATION COUVERCLES
73	270090	LID FIXING PROFILE	PERFIL FIJACION TAPAS	PROFILE FIXATION COUVERCLES
74	146373	BICR.HEX SCREW DIN933-8 M 8X10	TOR.EX.DIN933-8.8 B.TRI.M 8X10	VIS HEX BICR.DIN933-8.8 M 8X10
75	133033	INOX FLAT SCREW DIN85 M8X25 A2	TOR.PLA.DIN85 INOX A2-70 M8X25	VIS PLAT INOX DIN85 M8X25 A270
76	194498	LID WASHER	ARANDELA TAPAS	RONDELLE COUVERCLES
77	191924	CAGED NUT M8 1-1,7	TUER.ENJ.M8 1-1,7 R.310010-8	ECROU ENCAGE M8 1-1,7
78	193508	SIDE PANEL GASKET PROFILE (1 METER)	PERFIL JUNTA TAPAS LATERALES (1 METRO)	PROFILE JOINT COUVERCLES LAT. (1 METRE)
79	268540	ROLL COVER BRACKET	SOPORTE TAPA RODILLO	SUPPORT COUVERCLE ROULEAU
81	272153	FOLDER AREA COVER (WITHOUT FOLDER)	TAPETA ZONA PLEGADOR (SIN PLEGADOR)	COUVERCLE ZONE PLIEUSE (SANS PLIEUSE)
82	275693	LINEN OUTLET HOLD-DOWN COVER (WITHOUT FOLDER)	TAPA ANCLAJES SALIDA ROPA (SIN PLEGADOR)	COUVERCLE SCELLEM.SORTIE LINGE (SANS PLIEUSE)
84	306639	AMPLIFIER PG 13-16	AMPLIFICADOR PG 13-16	AMPLIFICATEUR PG 13-16
85	181701	LEGRAND CONE 91911	CONO LEGRAND 91911	CONE LEGRAND 91911
86	406447	LID FIXING PROFILE	PERFIL FIJACION TAPAS	PROFILE FIXATION COUVERCLES

Nº	REF	DENOMINATION	DENOMINACIÓN	DENOMINATION
		FROM MACHINE Nr:	A PARTIR DE LA MAQUINA No :	A PARTIR DE LA MACHINE NR:
		615.028 620.275 625.195 630.367	615.028 620.275 625.195 630.367	615.028 620.275 625.195 630.367
9	405324	ENCODER SCREW	TORNILLO ENCODER	VIS ENCODER
	144006	ALLEN BUMP DIN 913 M-4X20	ESP.ALL.DIN913-10.9 M 4X20	GOUJON ALLEN DIN 913 M-4X20
	150185	BICR.HEX.NUT DIN934-8 M4	TUER.EX.DIN934-8 B.TRI.M 4	ECROU HEX.DIN934-8 BICR.M4
10	273367	CANCELLED	ANULADO	ANNULE
14	285502	ENCODER ANTI-ROTATION PIECE	PIEZA ANTI-ROTACION ENCODER	PIECE ANTI-ROTATION ENCODER
	146464	BICR.HEX SCREW DIN933-8 M8X100	TOR.EX.DIN933-8.8 B.TRI.M8X100	VIS HEX BICR.DIN933-8 M 8X100
	150201	BICR.HEX NUT DIN 934-8 M-8	TUER.EX.DIN934-8 B.TRI.M 8	ECROU HEX.DIN 934-8 BICR.M-8
	149518	BICR.WASHER B DIN125-ST 8,4	ARAN.B DIN125-ST B.TRI. 8,4	RONDELLE.B DIN125-ST BICR.8,4

Nº	REF	DENOMINATION	DENOMINACIÓN	DENOMINATION
		FROM MACHINE Nr:	A PARTIR DE LA MAQUINA No :	A PARTIR DE LA MACHINE NR:
		615.031 620.312 625.222 630.429	615.031 620.312 625.222 630.429	615.031 620.312 625.222 630.429
1	319541	MOTOR-REDUCER MR 3I 50 UC2A	MOTO-REDUCTOR MR 3I 50 UC2A *	MOTO-REDUCTEUR MR 3I 50 UC24
2	144477	ALLEN SCREW DIN 912 M-10X30	TOR.ALLDIN912-8.8 B.TRI.M10X30	VIS ALLEN DIN 912 M-10X30 50HZ
3	115428	WASHER 30X10,5X3	ARANDELA 30X10,5X3 TRIVALEN.	RONDELLE 30X10,5X3
4	341347	PRENSAE.EXAD.BRIDA 82006 M20	PRENSAE.EXAD.BRIDA 82006 M20	PRENSAE.EXAD.BRIDA 82006 M20
5	140244	CANCELLED	ANULADO	ANNULE
19	150193	BICR HEX NUT DIN 934-8 M10	TUER.EX.DIN934-8 B.TRI.M10	ECROU HEX DIN 934-8 BICR.M10
84	306639	CANCELLED	ANULADO	ANNULE

Nº	REF	DENOMINATION	DENOMINACIÓN	DENOMINATION
		FROM MACHINE Nr:	A PARTIR DE LA MAQUINA No :	A PARTIR DE LA MACHINE NR:
		615.033 620.331 625.233 630.455	615.033 620.331 625.233 630.455	615.033 620.331 625.233 630.455
66	319194	RIGHT SIDE PANEL	TAPA LATERAL DERECHA	COUVERCLE LATERAL DROIT

Nº	REF	DENOMINATION	DENOMINACIÓN	DENOMINATION
		FROM MACHINE Nr: 615.081 620.905 625.681 631.528	A PARTIR DE LA MAQUINA No : 615.081 620.905 625.681 631.528	A PARTIR DE LA MACHINE NR: 615.081 620.905 625.681 631.528
66	514547	TAPA LATERAL DERECHA (WHITE PAINTED)	TAPA LATERAL DERECHA (PINTADA BLANCA)	TAPA LATERAL DERECHA (PEINTE BLANCHE)

Nº	REF	DENOMINATION	DENOMINACIÓN	DENOMINATION
		FROM MACHINE Nr: 615.083 620.950 625.700 631.640	A PARTIR DE LA MAQUINA No : 615.083 620.950 625.700 631.640	A PARTIR DE LA MACHINE NR: 615.083 620.950 625.700 631.640
4	535583	STUFFING-BOX LONG THREAD 082016 M20	PRENSAE. EXADIN ROSCA LARGA 082016 M20	PRESSE-ETOUPES FILET LONG 082016 M20

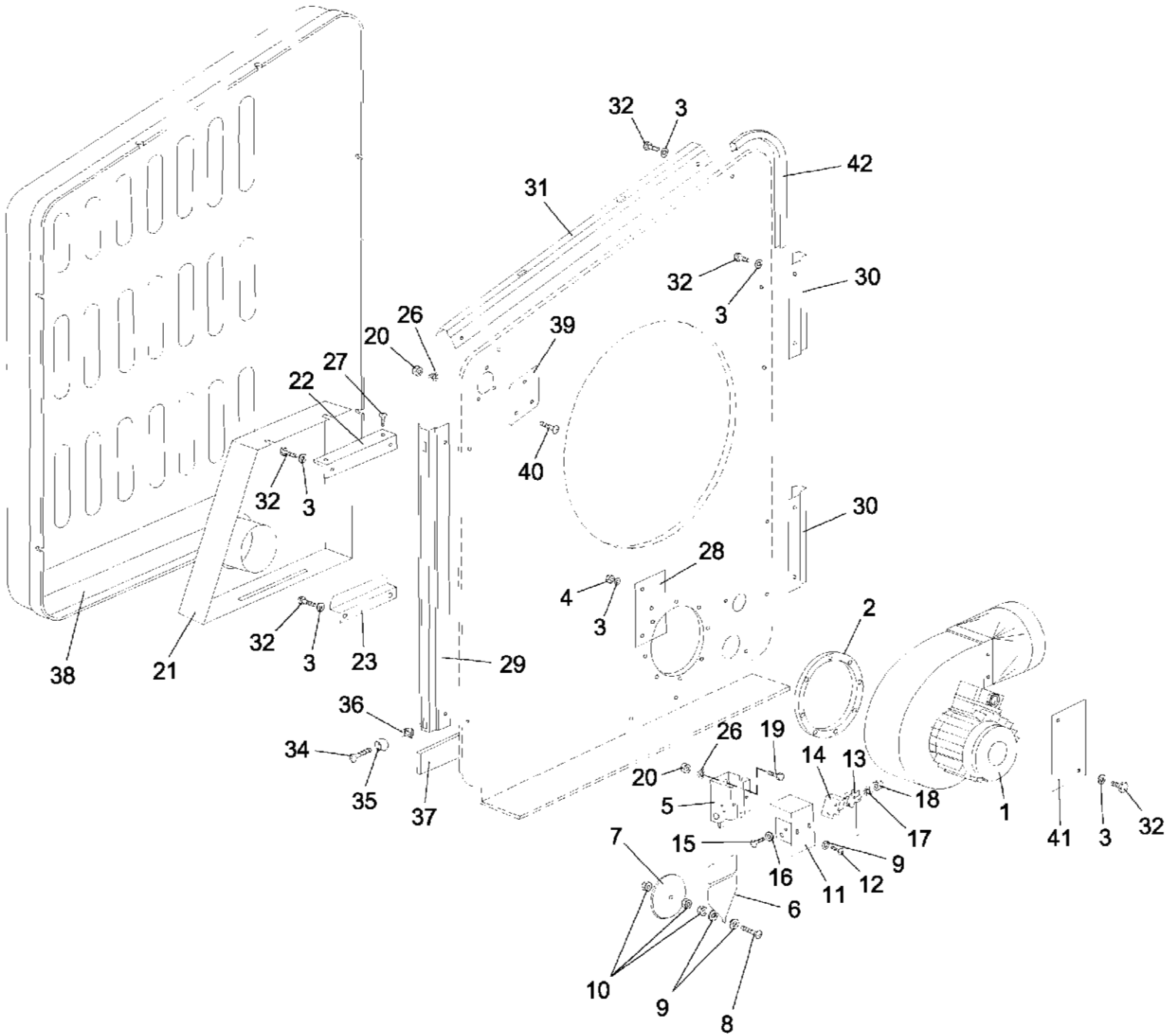
32
3
42
31
32
3
30
26
20
39
27
22
40
32
3
30
28
4
3
2
32
3
23
29
38
21
36
34
35
37
26
19
20
14
13
5
18
17
1
41
3
32
7
15
16
11
12
9
6
10
9
8
U.13074

Nº	REF		DENOMINATION	DENOMINACIÓN	DENOMINATION
1	197541		FAN PS-51	VENTILADOR PS-51 *	VENTILATEUR PS-51
	302760		FAN TURBINE CMP-616-2T/G	TURBINA VENTILAD.CMP-616-2T/G	TURBINE VENTIL.CMP-616-2T/G
	302752		BEARING 6202 Z C-3 CMP-616	RODAM.6202 Z C-3 CMP-616-2T/G	ROULEMENT 6202 Z C-3 CMP-616
2	270504		EXTRACTOR SEPARATOR	SEPARADOR EXTRACTOR	SEPARATEUR EXTRACTEUR
3	149518		BICR.WASHER B DIN125-ST 8,4	ARAN.B DIN125-ST B.TRI. 8,4	RONDELLE.B DIN125-ST BICR.8,4
4	150201		BICR.HEX NUT DIN 934-8 M-8	TUER.EX.DIN934-8 B.TRI.M 8	ECROU HEX.DIN 934-8 BICR.M-8
5	263707	*	MICRO BOX	CAJA MICRO	BOITE MICRO
6	263624		PENDULUM BODY	CUERPO PENDULO	CORPS PENDULE
7	262600		GATE DISK	DISCO COMPUERTA	DISQUE PORTE
8	146118		BICR CYL SCREW DIN84-4.8 M4X35	TOR.CIL.DIN84-4.8 B.TRI.M 4X35	VIS CYL BICR DIN84-4.8 M4X35
9	149476		BICR.WASHER B DIN125-ST 4,3	ARAN.B DIN125-ST B.TRI. 4,3	RONDELLE B DIN125-ST BICR.4,3
10	132043		SELFBLOCKING NUT DIN985 M 4	TUER.AUTOBL.DIN985-8 B.TRI.M 4	ECROU AUTOBLOCANT DIN985 M 4
11	263665		MICRO LID	TAPA MICRO	COUVERCLE MICRO
12	183400		CYL.PLATE SCREW ST-4 20 C/AL	TOR.CHAPA ST-4 20 C/AL.T25	VIS PLAQUE CYL.ST-4 20 C/AL
13	174888		DOOR MICROSWITCH	MICRORRUPTOR PUERTA	MICRORRUPTEUR PORTE
14	281113		MICROSWITCH ISOLATION	AISLANTE MICRORRUPTOR	ISOLANT MICRORRUPTEUR
15	146050		BICR CYL SCREW DIN84 M-3X20	TOR.CIL.DIN84-4.8 B.TRI.M 3X20	VIS CYL BICR DIN84-4.8 M 3X20
16	149484		BICR.WASHER B DIN125-ST 3,2	ARAN.B DIN125-ST B.TRI. 3,2	RONDELLE B.DIN125-ST BICR. 3,2
17	192708		BICR.EXT.TOOT.WASH.DIN6798 M3	ARAN.DEN.EXTER.B.TRI.DIN6798M3	RONDEL.DEN.EX.BICR.DIN6798 M3
18	149906		INOX. HEX. NUT DIN 934 M-3	TUER.EX.DIN934 INOX A2-70 M 3	ECROU HEX. INOX DIN934 M-3
19	146159		BICR.CYL SCREW DIN 84 M-6X20	TOR.CIL.DIN84-4.8 B.TRI.M 6X20	VIS CYL BICR DIN84-4.8 M 6X 20
20	150227		BICR HEX NUT DIN934-8 M6	TUER.EX.DIN934-8 B.TRI.M 6	ECROU HEX DIN934-8 BICR.M6
21	272823		FILTER	FILTRO	FILTRE
22	263582		FILTER FIXING-PIECE	FIJACION FILTRO	FIXATION FILTRE
23	263574		FILTER BRACKET	SOPORTE FILTRO	SUPPORT FILTRE
26	149716		BICR.EXT TOOT.WASH.DIN6798 M6	ARAN.DEN.EXT.B.TRI.DIN6798M 6	RONDEL.DEN.EX.BICR DIN6798 M6
27	146274		BICR.HEX SCREW DIN933-8 M-5X10	TOR.EX.DIN933-8.8 B.TRI.M 5X10	VIS HEX.BICR.DIN933-8.8 M-5X10

Nº	REF	DENOMINATION	DENOMINACIÓN	DENOMINATION
28	272161	EXTRACTION LID (FOR 5115) (FOR 5119)	TAPA EXTRACCION (PARA 5115) (PARA 5119)	COUVERCLE EXTRACTION (POUR 5115) (POUR 5119)
29	270116	LID FIXING PROFILE	PERFIL FIJACION TAPAS	PROFILE FIXATION COUVERCLES
30	270090	LID FIXING PROFILE	PERFIL FIJACION TAPAS	PROFILE FIXATION COUVERCLES
31	273466	LID FIXING PROFILE	PERFIL FIJACION TAPAS	PROFILE FIXATION COUVERCLES
32	146373	BICR.HEX SCREW DIN933-8 M 8X10	TOR.EX.DIN933-8.8 B.TRI.M 8X10	VIS HEX BICR.DIN933-8.8 M 8X10
34	133033	INOX FLAT SCREW DIN85 M8X25 A2	TOR.PLA.DIN85 INOX A2-70 M8X25	VIS PLAT INOX DIN85 M8X25 A270
35	194498	LID WASHER	ARANDELA TAPAS	RONDELLE COUVERCLES
36	191924	CAGED NUT M8 1-1,7	TUER.ENJ.M8 1-1,7 R.310010-8	ECROU ENCAGE M8 1-1,7
37	270967	SIDE PANEL GASKET	JUNTA TAPA LATERAL	JOINT COUVERCLE LATERALE
38	275008	LEFT SIDE PANEL FOR ELECTRICAL AND GAS HEATING	TAPA LAT. IZQUIERDA (319186) PARA CALEFACCION ELECTR.Y GAS	COUVERCLE LATERAL GAUCHE POUR CHAUFAGE ELECTRIQ.ET GAZ
39	289280	MANOMETER LID FOR ELECTRICAL AND GAS HEATING	TAPA MANOMETRO PARA CALEFACCION ELECTR.Y GAS	COUVERCLE MANOMETRE POUR CHAUFAGE ELECTRIQ.ET GAZ
40	145367	INOX SCREW DIN85 M6X20 A2-70	TOR.PLA.DIN85 INOX A2-70 M6X20	VIS INOX DIN85 M6X20 A2-70
41	272153	FOLDER AREA COVER FOR ELECTRICAL AND GAS HEATING	TAPETA ZONA PLEGADOR PARA CALEFACCION ELECTR.Y GAS	COUVERCLE ZONE PLIEUSE POUR CHAUFAGE ELECTRIQ.ET GAZ
42	193508	SIDE PANEL GASKET PROFILE (1 METER)	PERFIL JUNTA TAPAS LATERALES (1 METRO)	PROFILE JOINT COUVERCLES LAT. (1 METRE)
*	263715	ASPIRATION MICRO BOX(COMPLETE)	CAJA MICRO ASPIRAC.(COMPLETA)	BOITE MICRO ASPIRATION(COMPLET

Nº	REF	DENOMINATION	DENOMINACIÓN	DENOMINATION
		FROM MACHINE Nr:	A PARTIR DE LA MAQUINA No :	A PARTIR DE LA MACHINE NR:
		615.033 620.331 625.233 630.455	615.033 620.331 625.233 630.455	615.033 620.331 625.233 630.455
38	319186	LEFT SIDE PANEL	TAPA LATERAL IZQUIERDA	COUVERCLE LATERAL GAUCHE

Nº	REF	DENOMINATION	DENOMINACIÓN	DENOMINATION
		FROM MACHINE Nr: 615.081 620.905 625.681 631.528	A PARTIR DE LA MAQUINA No : 615.081 620.905 625.681 631.528	A PARTIR DE LA MACHINE NR: 615.081 620.905 625.681 631.528
38	514539	LEFT SIDE PANEL (WHITE PAINTED)	TAPA LATERAL IZQUIERDA (PINTADA BLANCA)	COUVERCLE LATERAL GAUCHE (PEINTE BLANCHE)

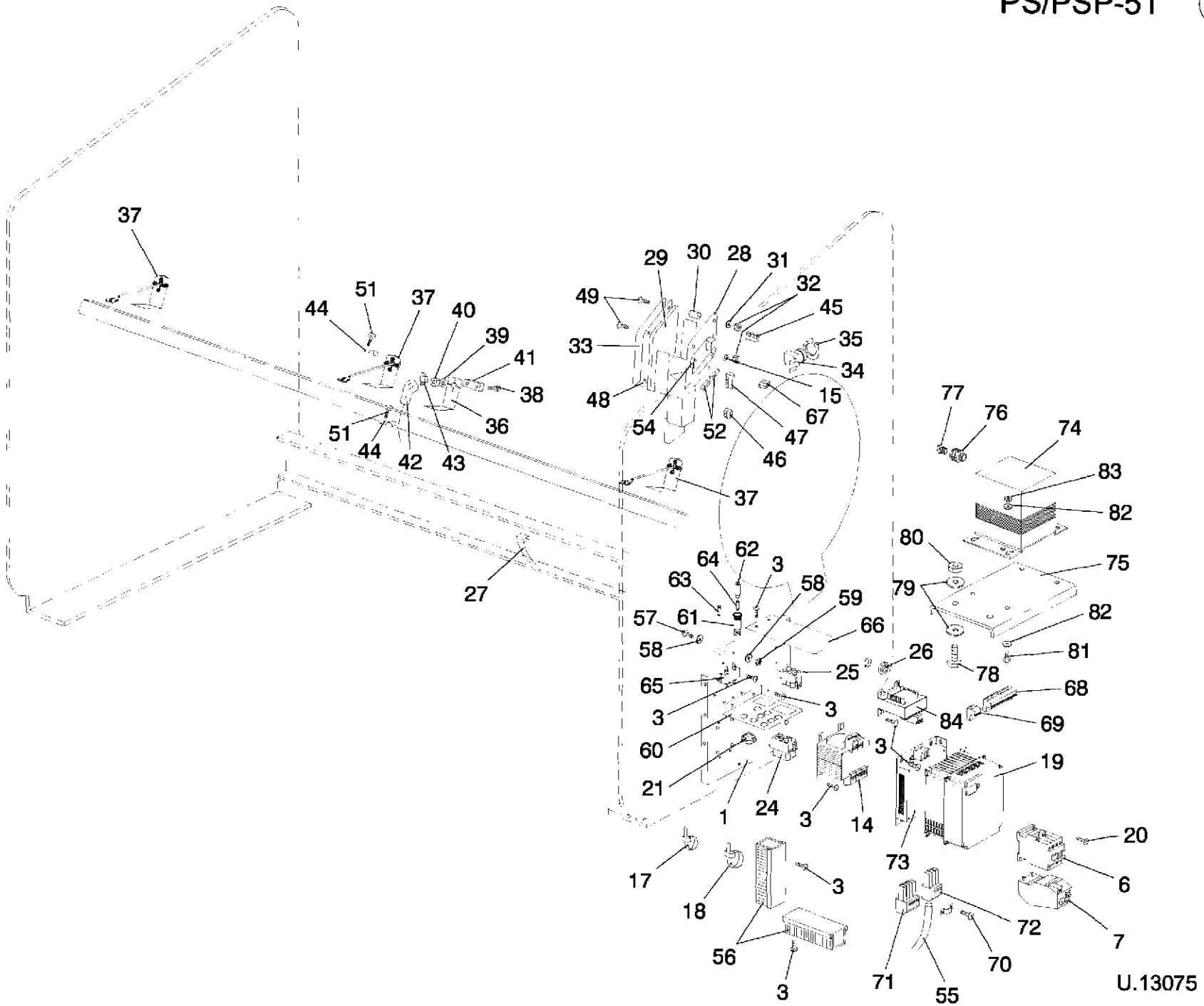
37
51
44
37
40
39
41
38
36
51
44
42
43
27
29
30
28
31
32
45
49
33
35
34
48
15
67
54
52
47
46
37
77
76
74
83
82
80
75
79
82
81
78
26
64
62
3
63
58
59
57
61
66
58
25
65
3
3
68
84
69
60
3
19
21
24
1
3
14
73
20
17
18
3
6
72
7
56
70
3
71
55
U.13075

Nº	REF	DENOMINATION	DENOMINACIÓN	DENOMINATION
1	281246	INSTALLATION BOX PLATE	PLACA CAJA INSTALACION	PLAQUE BOITE INSTALLATION
3	183400	CYL.PLATE SCREW ST-4 20 C/AL	TOR.CHAPA ST-4 20 C/AL.T25	VIS PLAQUE CYL.ST-4 20 C/AL
6	193441	CONTACTOR 3TF30 01-OAN2	CONTACTOR 3TF30 01-OAN2 ZZ	CONTACTEUR 3TF30 01-OAN2
	194050	COIL 3TY7 403-OAN2	BOBINA 3TY7 403-OAN2 ZZ	BOBINE 3TY7 403-OAN2
7	136473	RELAY 3UA50 00-1C 1,6-2,5A	RELE TERM.3UA50 00-1,6-2,5A ZZ	RELAIS TERM.3UA50 00-1C1,6-2,5
14	196931	TRANSFORMER IP00 160 VA	TRANSFORMADOR IP00 160 VA *	TRANSFORMATEUR IP00 160 VA
15	149732	BICR.EXT TOOT.WASH DIN6798 M4	ARAN.DEN.EXT.B.TRI.DIN6798M 4	RONDEL.DEN.EX.BICR.DIN6798 M4
17	140434	CLAMP 2221	BRIDA UNEX 2221 *	BRIDE 2221
18	140525	CLAMP 2244-0	BRIDA UNEX 2244-0 *	BRIDE 2244-0
19	285346	INVERTER PS-51	CONVERTIDOR PS-51 RECAMB.DANF.	CONVERTISSEUR PS-51
20	166645	CYL.PLATE SCREW DIN7971 8X5/8"	TOR.CHAPA CILI.DIN7971 8X5/8"	VIS PLAQUE CIL.DIN7971 8X5/8"
21	181701	LEGRAND CONE 91911	CONO LEGRAND 91911	CONE LEGRAND 91911
23	304451	PLUG	CONECTOR ALIMENTACION 195H6134	CONNECTEUR
24	139402	PROTECTOR 1/480709-0	PROTECTOR 1/480709-0	PROTECTEUR 1/480709-0
25	139410	PROTECTOR 1/480708-0	PROTECTOR 1/480708-0	PROTECTEUR 1/480708-0
26	199224	EXT.FLEXIBLE WASHER SPGS-5	ARANDELA INTER.FLEXIBLE SPGS-5	RONDELLE INTER.FLEXIBLE SPGS-5
27	198556	QUICK FIXING CLIP	CLIP FIJACION RAPIDA 101-231	CLIP FIXATION RAPIDE
28	197632	PROCESSOR BOARD	PLACA MICROPROCESADOR	PLAQUE MICROPROCESSEUR
	198481	EPROM PS-51 VER5.9	EPROM PS-51 VER5.9	EPROM PS-51 VER5.9
	187203	INPUT OPTOISOLATOR 4N35	OPTOACOPLADOR ENTRADA 4N35	OPTOISOLATOR ENTREE 4N35
	187211	OUTPUT OPTOISOLATOR	OPTOACOPLADOR SALIDA	OPTOISOLATOR SORTIE
	196410	DISPLAY TDSR 1350	DISPLAY TDSR 1350	DISPLAY TDSR 1350
29	268664	PLATE ISOLATION	AISLANTE PLACA	ISOLANT PLAQUE
30	283051	SEPARATOR M-4X5,7	SEPARADOR M-4X5,7	SEPARATEUR M-4X5,7
31	149476	BICR.WASHER B DIN125-ST 4,3	ARAN.B DIN125-ST B.TRI. 4,3	RONDELLE B DIN125-ST BICR.4,3
32	150185	BICR.HEX.NUT DIN934-8 M4	TUER.EX.DIN934-8 B.TRI.M 4	ECROU HEX.DIN934-8 BICR.M4
33	197921	KEYBOARD PLATE	CARATULA TECLADO PS-51	PLAQUE CLAVIER
34	300368	THERMOSTAT ZERTAN 01 159 323	TERMOSTATO ZERTAN 01 159 323	THERMOSTAT ZERTAN 01 159 323

Nº	REF	DENOMINATION	DENOMINACIÓN	DENOMINATION
35	131524	FLEXIBLE RING E-25 DIN 471	ANILLO ELASTICO E-25 DIN 471	BAGUE ELASTIQUE E-25 DIN 471
36	420810	PROBET BRACKET	SOPORTE SONDA	SUPPORT SONDE
37	420828	TEMPERATURE PROBE	SONDA TEMPERATURA	SONDE TEMPERATURE
38	146043	BIC CYL SCREW DIN84-4,8 M3X16	TOR.CIL.DIN84-4.8 B.TRI.M 3X16	VIS CYL DIN84-4,8 BICR.M3X16
39	149484	BICR.WASHER B DIN125-ST 3,2	ARAN.B DIN125-ST B.TRI. 3,2	RONDELLE B.DIN125-ST BICR. 3,2
40	149906	INOX. HEX. NUT DIN 934 M-3	TUER.EX.DIN934 INOX A2-70 M 3	ECROU HEX. INOX DIN934 M-3
41	261735	THERMOSTAT SLIDE	PATIN TERMOSTATO	PATIN THERMOSTAT
42	259788	ISOLATION HOSE	TUBO AISLANTE	TUBE ISOLANT
43	192450	THERMOSTAT 200ºC	TERMOSTATO 2455RC 200ºC *	THERMOSTAT 200ºC
44	198507	FIXING CLAMP 1X 8 DIN 72571	ABRAZ.FIJACION 1X 8 DIN 72571	BRIDE FIXATION 1X 8 DIN 72571
45	183897	PROTECTOR 1/480700-0	PROTECTOR 1/480700-0	PROTECTEUR 1/480700-0
46	183889	PROTECTOR 1/480698-0	PROTECTOR 1/480698-0	PROTECTEUR 1/480698-0
47	183913	PROTECTOR 1/480763-0	PROTECTOR 1/480763-0	PROTECTEUR 1/480763-0
48	277004	CONTROL CASE FRONT	FRONTAL CAJA MANDOS	FRONTAL BOÎTE COMMANDES
49	302604	BICR.SCREW DIN963-4.8 M 4X 20	TOR.AV.DIN963-4.8 B.TRI.M 4X20	VIS T/FRAIS.DIN963-4.B.M 4X 20
51	146258	BIC.HEX SCREW DIN933-4.8 M4X10	TOR.EX.DIN933-4.8 B.TRI.M 4X10	VIS HEX DIN933-4.8 BICR.M 4X10
52	197301	PROTECTOR AMP-UNYT 1-640029-6	PROTECTOR AMP-UNYT 1-640029-6	PROTECTEUR AMP-UNYT 1-640029-6
53	197426	POLARIZATION AMP 640180-1	POSICIONADOR AMP 640180-1	POLARIZATION AMP 640180-1
54	197301	PROTECTOR AMP-UNYT 1-640029-6 (WITH FOLDER)	PROTECTOR AMP-UNYT 1-640029-6 (CON PLEGADOR)	PROTECTEUR AMP-UNYT 1-640029-6 (AVEC PLIEUSE)
55	197277	HOSE (1 METER)	TUBO INTERFLEX 22009 D.IN.12 (1 METRO)	TUBE (1 METRE)
56	142406	CHANNEL RE. 40.30.77	CANAL UNEX 40.30.77	CANAL REF. 40.30.77
57	146282	BICR.HEX SCREW DIN933-8 M 5X15	TOR.EX.DIN933-8.8 B.TRI.M 5X15	VIS HEX BICR.DIN933-8.8 M 5X15
58	149724	BICR EXT.TOOT.WASH.DIN6798 M5	ARAN.DEN.EXT.B.TRI.DIN6798M 5	RONDEL DEN.EX.BICR.DIN6798 M5
59	150177	BICR HEX NUT DIN934-8 M5	TUER.EX.DIN934-8 B.TRI.M 5	ECROU HEX DIN934-8 BIC.M5
60	279877	FUSE BRACKET	SOPORTE FUSIBLES	SUPPORT FUSIBLES
61	160119	FUSE HOLDER REF.FEC 031 1631	PORTAFUSIBLES REF.FEC.031.1631	PORTE-FUSIBLE REF.FEC 031 1631
62	137661	BAYONET HEAD	CABEZA BAYONETA FEK.031.1613	TETE BAYONETTE

Nº	REF	DENOMINATION	DENOMINACIÓN	DENOMINATION
63	182485	FUSE FST 0034.5225 1A	CART.FUSIB.FST 0034.5225 1 A*	CARTOUCHE FUS.FST 0034.5225 1A
64	304469	FUSE FST 0034 5241 6,2A	CART.FUSIB.FST 0034.5241 6,2A*	CART.FUSIB.FST 0034 5241 6,2A*
65	199836	FILTER FRI FA-1Z	FILTRO DE RED RFI TIPO FA-1Z	FILTRE RFI FA-1Z
66	284968	CONVERTER PLATE	VISERA CONVERTIDOR	PLAQUE CONVERTISSEUR
67	135442	CONNECTION-BOARD MAI E-ST-1	REGLETA PLANA 12ELEM. REF.PA21	REGLETTE MAI E-ST-1 12ELE
68	304436	PLUG	CONECTOR TERM.CONTROL 195H6109	CONNECTEUR
69	304428	RELAY OUTLET PLUG	CONECTOR SALIDA RELE 195H6108	CONNECTEUR SORTIE RELAIS
70	146092	BICR CYLD SCREW DIN84 M 4X 16	TOR.CIL.DIN84-4.8 B.TRI.M 4X16	VIS CYL BICR DIN84-4.8 M 4X 16
71	304451	PLUG	CONECTOR ALIMENTACION 195H6134	CONNECTEUR
72	304444	MOTOR OUTLET CONNECTOR	CONECTOR SALIDA MOTOR 195H6103	CONNECTEUR SORTIE MOTEUR
73	304410	FILTER EMC FOR VLT 2015	FILTRO EMC PARA VLT 2015 *	FILTRE EMC POUR VLT 2015
74	304477	TRANSFORMER IP54 800 VA (FOR 440V)	TRANSFORMADOR IP54 800 VA * (PARA 440V)	TRANSFORMATEUR IP54 800 VA (POUR 440V)
75	405316	TRANSFORMER BRACKET (FOR 440V)	SOPORTE TRANSFORMADOR (PARA 440V)	SUPPORT TRANSFORMATEUR (POUR 440V)
76	140368	REDUCER PG 21-11	REDUCTOR 211104 PG 21-11	REDUCTEUR PG 21-11
77	140160	RACCORD PG-11	RACOR PG-11 REF.331104	RACCORD PG-11
78	146506	8G HEX.SCREW DIN 933 M-10X30	TOR.EX.DIN933-8.8 B.TRI.M10X30	VIS HEX. 8G DIN 933 M-10X30
79	149500	BICR.WASHER B DIN125-ST 10,5	ARAN.B DIN125-ST B.TRI.10,5	RONDELLE B DIN125-ST BICR.10,5
80	150649	SELFBLOCKING NUT DIN 985 M-10	TUER.AUTOB.DIN985-8 B.TRI.M10	ECROU AUTOBLOCANT DIN 985 M-10
81	146233	BICR.HEX SCREW DIN933-8 M6X15	TOR.EX.DIN933-8.8 B.TRI.M 6X15	VIS HEX DIN933-8.8 BICR.M6X15
82	149526	BICR.WASHER B DIN125-ST 6,4	ARAN.B DIN125-ST B.TRI. 6,4	RONDELLE B DIN125-ST BICR.6,4
83	150227	BICR HEX NUT DIN934-8 M6	TUER.EX.DIN934-8 B.TRI.M 6	ECROU HEX DIN934-8 BICR.M6

Nº	REF	DENOMINATION	DENOMINACIÓN	DENOMINATION
		FROM MACHINE Nr:	A PARTIR DE LA MAQUINA No :	A PARTIR DE LA MACHINE NR:
		615.030 620.285 624.204 630.398	615.030 620.285 625.204 630.398	615.030 620.285 625.204 630.398
19	405563	FREQUENCY INVERTER PS-51	CONVERTIDOR FRECUENCIA PS-51	CONVERTISSEUR FREQUENCE PS-51
68	304436	CANCELLED	ANULADO	ANNULE
69	304428	CANCELLED	ANULADO	ANNULE
71	304451	CANCELLED	ANULADO	ANNULE
72	304444	CANCELLED	ANULADO	ANNULE
73	318287	FILTER TP.EFL-0.75C11-7	FILTRO TIPO EFL-0.75C11-7	FILTRE TP.EFL-0.75C11-7
84	318295	INDUCTANCE DCR001	INDUCTANCIA DCR001	INDUCTANCE DCR001

Nº	REF	DENOMINATION	DENOMINACIÓN	DENOMINATION
		FROM MACHINE Nr:	A PARTIR DE LA MAQUINA No :	A PARTIR DE LA MACHINE NR:
		610.050 620.502 625.353 630.790	610.050 620.502 625.353 630.790	610.050 620.502 625.353 630.790
6	326199	CONTACTOR 3RT10 16-1AP02	CONTACTOR 3RT10 16-1AP02	CONTACTEUR 3RT10 16-1AP02
7	326264	RELAY 3RU11 16-1CB0 1,8-2,5	RELE TER.3RU11 16-1CB0 1,8-2,5	RELAIS TERM.3RU11 16-1CB0 1,8

Nº	REF	DENOMINATION	DENOMINACIÓN	DENOMINATION
		FROM MACHINE Nr:	A PARTIR DE LA MAQUINA No :	A PARTIR DE LA MACHINE NR:
		615.069	615.069	615.069
		620.745	620.745	620.745
		625.539	625.539	625.539
		631.171	631.171	631.171
		TO MACHINE No :	HASTA LA MAQUINA No:	JUSQU'À LA MACHINE No :
		615.080	615.080	615.080
		620.904	620.904	620.904
		625.680	625.680	625.680
		631.527	631.527	631.527
19	432021	FREQUENCY INVERTER PS-51 C1S	CONVERTIDOR FREC. PS-51 C1S	CONVERTISSEUR FREQUENCE PS-51 C1S
73	431841	FILTER 0.75C1S	FILTRO 0.75C1S	FILTRE 0.75C1S

Nº	REF	DENOMINATION	DENOMINACIÓN	DENOMINATION
		FROM MACHINE Nr: 615.081 620.905 625.681 631.528	A PARTIR DE LA MAQUINA No : 615.081 620.905 625.681 631.528	A PARTIR DE LA MACHINE NR: 615.081 620.905 625.681 631.528
19	517557	FREQUENCY INVERTER PS-51 C1S	CONVERTIDOR FREC. PS-51 C1S	CONVERTISSEUR FREQUENCE. PS-51 C1S
28	517532	PROCESSOR BOARD	PLACA MICROPROCESADOR	PLAQUE MICROPROCESSEUR
	517540	EPROM PS-51 VER. 9.0	EPROM PS-51 VER. 9.0	EPROM PS-51 VER. 9.0

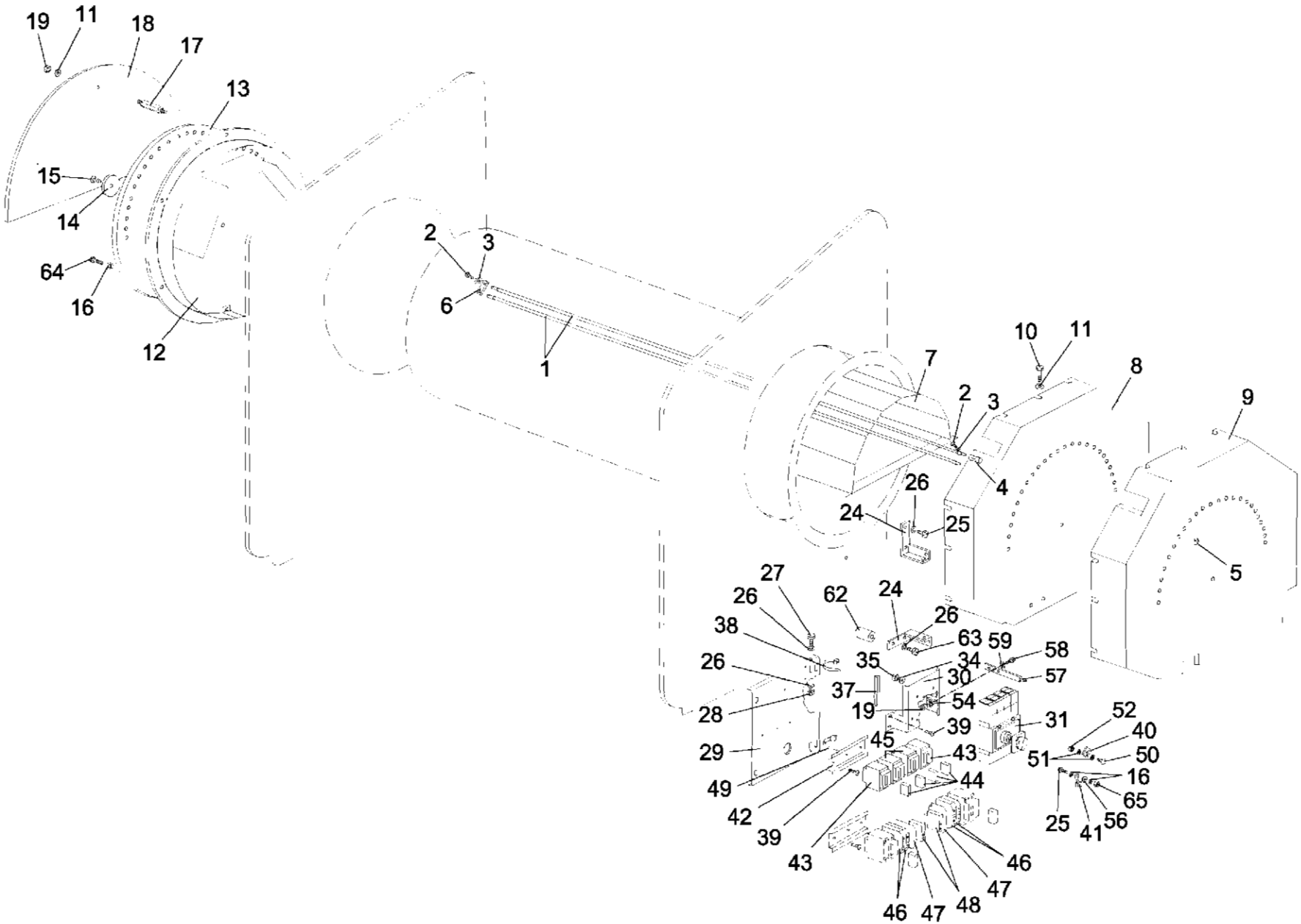
19
11
18
17
13
15
14
64
16
12
2
3
6
1
7
10
11
8
9
2
3
4
26
24
25
5
27
26
62
24
26
38
63
59
58
26
35
34
57
30
37
54
28
19
39
31
52
40
29
45
43
51
50
49
44
16
42
65
39
25
41
56
43
46
47
46
47
48

U.13076

Nº	REF	DENOMINATION	DENOMINACIÓN	DENOMINATION
1	198523	HEATER 110V 1167W (FOR 5115) (FOR 200,208,220 AND 380V)	CALEFACTOR 110V 1167W (PARA 5115) (PARA 200,208,220 Y 380V)	RESISTANCE 110V 1167W (POUR 5115) (POUR 200,208,220 ET 380V)
	198572	HEATER 110V 1479W (FOR 5119) (FOR 200,208,220 AND 380V)	CALEFACTOR 110V 1479W (PARA 5119) (PARA 200,208,220 Y 380V)	RESISTANCE 110V 1479W (POUR 5119) (POUR 200,208,220 ET 380V)
	198564	HEATER 110 1958W (FOR 5125) (FOR 200,208,220 AND 380V)	CALEFACTOR 110V 1958W (PARA 5125) (PARA 200,208,220 Y 380V)	RESISTANCE 110V 1958W (POUR 5125) (POUR 200,208,220 ET 380V)
	197061	HEATER 110V 2500W (FOR 5132) (FOR 200,208,220 AND 380V)	CALEFACTOR 110V 2500W (PARA 5132) (PARA 200,208,220 Y 380V)	RESISTANCE 110V 2500W (POUR 5132) (POUR 200,208,220 ET 380V)
	198580	HEATER 120V 1167W (FOR 5115) (FOR 240-415-440V)	CALEFACTOR 120V 1167W (PARA 5115) (PARA 240-415-440V)	RESISTANCE 120V 1167W (POUR 5115) (POUR 240-415-440V)
	198549	HEATER 120V 1479W (FOR 5119) (FOR 240-415-440V)	CALEFACTOR 120V 1479W (PARA 5119) (PARA 240-415-440V)	RESISTANCE 120V 1479W (POUR 5119) (POUR 240-415-440V)
	198531	HEATER 120V 1958W (FOR 5125) (FOR 240-415-440V)	CALEFACTOR 120V 1958W (PARA 5125) (PARA 240-415-440V)	RESISTANCE 120V 1958W (POUR 5125) (POUR 240-415-440V)
	197079	HEATER 120V 2500W (FOR 5132) (FOR 240-415-440V)	CALEFACTOR 120V 2500W (PARA 5132) (PARA 240-415-440V)	RESISTANCE 120V 2500W (POUR 5132) (POUR 240-415-440V)
2	195685	INOX FLAT SCREW DIN85 M4X6 A2	TOR.PLA.DIN85 INOX A2-70 M4X 6	VIS PLAT INOX DIN85 M4X6 A2-70
3	149732	BICR.EXT TOOT.WASH DIN6798 M4	ARAN.DEN.EXT.B.TRI.DIN6798M 4	RONDEL.DEN.EX.BICR.DIN6798 M4
4	222315	HEATER PROTECTOR	PROTECTOR CALEFACTOR	PROTECTEUR RESISTANCE
5	196196	CLAMP 10	ABRAZ.DE MUELLE DE 10 201406-8	BRIDE 10
6	272443	HEATER BRIDGE	PUENTE CALEFACTORES	PONT RESISTANCES
7	274696	HEATER BRACKET SET (FOR 5115)	CONJUNTO SOPORTE RESISTENCIAS (PARA 5115)	ENSEMBLE SUPPORT RESISTANCES (POUR 5115)
	274613	HEATER BRACKET SET (FOR 5119)	CONJUNTO SOPORTE RESISTENCIAS (PARA 5119)	ENSEMBLE SUPPORT RESISTANCES (POUR 5119)
	274597	HEATER BRACKET SET (FOR 5125)	CONJUNTO SOPORTE RESISTENCIAS (PARA 5125)	ENSEMBLE SUPPORT RESISTANCES (POUR 5125)
	271064	HEATER BRACKET SET (FOR 5132)	CONJUNTO SOPORTE RESISTENCIAS (PARA 5132)	ENSEMBLE SUPPORT RESISTANCES (POUR 5132)
8	270991	ROLL RIGHT COVER	TAPA DERECHA RODILLO	COUVERCLE DROITE ROULEAU

Nº	REF	DENOMINATION	DENOMINACIÓN	DENOMINATION
9	197129	RIGHT COVER ISOLATION	AISLANTE TAPA DERECHA	ISOLANT COUVERCLE DROITE
10	165621	BIC HEX SCREW DIN933-8,8 M6X10	TOR.EX.DIN933-8.8 B.TRI.M 6X10	VIS HEX DIN933-8,8 BICR M6X10
11	149526	BICR.WASHER B DIN125-ST 6,4	ARAN.B DIN125-ST B.TRI. 6,4	RONDELLE B DIN125-ST BICR.6,4
12	271049	ROLL LEFT COVER	TAPA IZQUIERDA RODILLO	COUVERCLE GAUCHE ROULEAU
13	197178	LEFT COVER ISOLATION	AISLANTE TAPA IZQUIERDA	ISOLANT COUVERCLE GAUCHE
14	222166	WASHER 60X4.5X1	ARANDELA 60X4.5X1 ACERO	RONDELLE 60X4.5X1
15	195552	PLATE SCREW DIN7971 8X3/4"	TOR.CHAPA CILI.DIN7971 8X3/4"	VIS DE PLAQUE DIN7971 8X3/4"
16	149708	BICR.EXT.TOOT.WASH.DIN6798 M8	ARAN.DEN.EXT.B.TRI.DIN6798M 8	RONDEL.DEN.EX.BICR.DIN6798 M8
17	289488	HEATER COVER SCREW	TORNILLO TAPA CALEFACTORES	VIS COUVERCLE RESISTANCES
18	272120	HEATER COVER	TAPA CALEFACTORES	COUVERCLE RESISTANCES
19	150227	BICR HEX NUT DIN934-8 M6	TUER.EX.DIN934-8 B.TRI.M 6	ECROU HEX DIN934-8 BICR.M6
24	271965	INSTALLATION BOX BRACKET	SOPORTE CAJA INSTALACION	SUPPORT BOITE INSTALLATION
25	166652	BIC.HEX SCREW DIN933-8.8 M8X15	TOR.EX.DIN933-8.8 B.TRI.M 8X15	VIS HEX DIN933-8.8 BICR. M8X15
26	149518	BICR.WASHER B DIN125-ST 8,4	ARAN.B DIN125-ST B.TRI. 8,4	RONDELLE.B DIN125-ST BICR.8,4
27	192849	BIC.HEX SCREW DIN933-8 M-8X25	TOR.EX.DIN933-8.8 B.TRI.M 8X25	VIS HEX.DIN933-8,8 BICR.M-8X25
28	164285	SELFBLOCKING NUT DIN985 M-8	TUER.AUTOBL.DIN985-8 B.TRI.M8	ECROU AUTOBLOCANT DIN985 M-8
29	259366	INSTALLATION BOX PLATE	PLACA CAJA INSTALACION	PLAQUE BOITE INSTALLATION
30	274357	SECTION BRACKET	SOPORTE SECCIONADOR	SUPPORT SECTIONNEUR
31	196873	SECTION SWITCH N64-100-V (FOR 380,415 AND 440V)	INTERR.SECCIONADOR N64-100 (PARA 380,415 Y 440V)	INTERRUPTEUR SECTIONNEUR 100-V (POUR 380,415 ET 440V)
	196246	SECTION SWITCH N6 -100-V (FOR 5115) (FOR 5119) (FOR 200,208 AND 220V)	INTERRUPT.SECCIONADOR N6 -100 (PARA 5115) (PARA 5119) (PARA 200,208 Y 220V)	INTERRUPTEUR SECTIONNEUR 100-V (POUR 5115) (POUR 5119) (POUR 200,208 ET 220V)
	196881	SECTION SWITCH N6 200-V (FOR 5125) (FOR 5132) (FOR 200,208 AND 220V)	INTERR.SECCIONADOR N6 -200 (PARA 5125) (PARA 5132) (PARA 200,208 Y 220V)	INTERRUPTEUR SECCIONNEUR 200-V (POUR 5125) (POUR 5132) (POUR 200,208 ET 220V)
32	199745	TERMINAL COVER H-NZM64 (4P) (FOR 380,415 AND 440V)	TAPA BORNES H-NZM64 (4POLOS) (PARA 380,415 Y 440V)	COUVERCLE BORNES H-NZM64 (4P) (POUR 380,415 ET 440V)
	199737	TERMINAL COVER H-NZM6 (3P) (FOR 200,208 AND 220V)	TAPA BORNES H-NZM6 (3POLOS) (PARA 200,208 Y 220V)	COUVERCLE BORNES H-NZM6 (3P) (POUR 200,208 ET 220V)
33	198119	CYL.DIN84-4.8 BICR SCREW M4X50	TOR.CIL.DIN84-4.8B.TRI.M 4X50	VIS.CYL DIN84-4.8 BICR.M 4X50

Nº	REF	DENOMINATION	DENOMINACIÓN	DENOMINATION
34	149476	BICR.WASHER B DIN125-ST 4,3	ARAN.B DIN125-ST B.TRI. 4,3	RONDELLE B DIN125-ST BICR.4,3
35	150185	BICR.HEX.NUT DIN934-8 M4	TUER.EX.DIN934-8 B.TRI.M 4	ECROU HEX.DIN934-8 BICR.M4
36	275958	SWITCH HANDLE	MANETA PARA INTERRUPTOR	MANETTE INTERRUPTEUR
37	192021	PROFILE (2 METERS)	ENCUADERNADOR P (NEGRO) 2MT. (2 METROS)	PROFILE (2 METRES)
38	140525	CLAMP 2244-0	BRIDA UNEX 2244-0 *	BRIDE 2244-0
39	183400	CYL.PLATE SCREW ST-4 20 C/AL	TOR.CHAPA ST-4 20 C/AL.T25	VIS PLAQUE CYL.ST-4 20 C/AL
40	176248	EARTH INTAKE SIGN	SIGNO TOMA TIERRA	SIGNE PRISE TERRE
41	198887	TERMINAL M 8 BURNDY KPA25 (FOR 5115) (FOR 5119)	TERMINAL M 8 BURNDY KPA25 (PARA 5115) (PARA 5119)	TERMINAL M 8 BURNDY KPA25 (POUR 5115) (POUR 5119)
	198887	TERMINAL M 8 BURNDY KPA25 (FOR 5125) (FOR 5132) (FOR 380,415 AND 440V)	TERMINAL M 8 BURNDY KPA25 (PARA 5125) (PARA 5132) (PARA 380,415 Y 440V)	TERMINAL M 8 BURNDY KPA25 (POUR 5125) (POUR 5132) (POUR 380,415 ET 440V)
	199117	TERMINAL G.I.E. T-10 (FOR 5125) (FOR 5132) (FOR 200,208,220 AND 240V)	TERMINAL BURNDY KPA28 (PARA 5125) (PARA 5132) (PARA 200,208,220 Y 240V)	TERMINAL G.I.E. T-10 (POUR 5125) (POUR 5132) (POUR 200,208,220 ET 240V)
42	218453	CONTACTORS FIXING PROFILE	PERFIL FIJACION CONTACTORES	PROFILE FIXATION CONTACTEURS
43	195339	CONTACTOR 3TF33 00-OAN2 (FOR 5115) (FOR 5119)	CONTACTOR 3TF33 00-OAN2 (PARA 5115) (PARA 5119)	CONTACTEUR 3TF33 00-OAN2 (POUR 5115) (POUR 5119)
	194050	COIL 3TY7 403-OAN2	BOBINA 3TY7 403-OAN2 ZZ	BOBINE 3TY7 403-OAN2
	192278	CONTACTOR 3TF34 00-OAN2 (FOR 5125) (FOR 5132)	CONTACTOR 3TF34 00-OAN2 ZZ (PARA 5125) (PARA 5132)	CONTACTEUR 3TF34 00-OAN2 (POUR 5125) (POUR 5132)
	302810	COIL 37Y7 443-OAN2	BOBINA 3TY7 443-OAN2 ZZ	BOBINE 3TY7 443-OAN2
44	193466	AUX. CONTACT BLOCK 3TX4001-2A	BLOQUE CONTAC.AUX.3TX4001-2 ZZ	BLOC CONTACT AUX. 3TX4001-2A
45	195339	CONTACTOR 3TF33 00-OAN2 (FOR 5115) (FOR 5119) (FOR 200,208,220 AND 380V)	CONTACTOR 3TF33 00-OAN2 (PARA 5115) (PARA 5119) (PARA 200,208,220 Y 380V)	CONTACTEUR 3TF33 00-OAN2 (POUR 5115) (POUR 5119) (POUR 200,208,220 ET 380V)
	194050	COIL 3TY7 403-OAN2	BOBINA 3TY7 403-OAN2 ZZ	BOBINE 3TY7 403-OAN2
	192278	CONTACTOR 3TF34 00-OAN2 (FOR 5125) (FOR 5132) (FOR 200,208,220 AND 380V)	CONTACTOR 3TF34 00-OAN2 ZZ (PARA 5125) (PARA 5132) (PARA 200,208,220 Y 380V)	CONTACTEUR 3TF34 00-OAN2 (POUR 5125) (POUR 5132) (POUR 200,208,220 ET 380V)

Nº	REF	DENOMINATION	DENOMINACIÓN	DENOMINATION
	302810	COIL 37Y7 443-OAN2	BOBINA 3TY7 443-OAN2 ZZ	BOBINE 3TY7 443-OAN2
46	163360	TERMINAL BC 25/35 630655 (FOR 380,415 AND 440V)	BORNA CIAMA BC 25/35 630655 (PARA 380,415 Y 440V)	BORNE BC 25/35 630655 (POUR 380,415 ET 440V)
47	162669	END COVER FC 16/25 (FOR 380,415 AND 440V)	TAPA FIN.CIAMA FC 16/25 635655 (PARA 380,415 Y 440V)	COUVERCLE FINAL FC 16/25 (POUR 380,415 ET 440V)
48	142331	FIXING CLAMP (FOR 380,415 AND 440V)	TOPE FIJACION PARA RAILES * (PARA 380,415 Y 440V)	BRIDE FIXATION (POUR 380,415 ET 440V)
49	199273	CLAMP PRTZEH-Q0	BRIDA RECUPERABLE PRTZEH-Q0	BRIDE PRTZEH-Q0
50	146282	BICR.HEX SCREW DIN933-8 M 5X15	TOR.EX.DIN933-8.8 B.TRI.M 5X15	VIS HEX BICR.DIN933-8.8 M 5X15
51	149724	BICR EXT.TOOT.WASH.DIN6798 M5	ARAN.DEN.EXT.B.TRI.DIN6798M 5	RONDEL DEN.EX.BICR.DIN6798 M5
52	150177	BICR HEX NUT DIN934-8 M5	TUER.EX.DIN934-8 B.TRI.M 5	ECROU HEX DIN934-8 BIC.M5
56	149518	BICR.WASHER B DIN125-ST 8,4 (FOR 5125) (FOR 5132) (FOR 200,208,220 AND 240V)	ARAN.B DIN125-ST B.TRI. 8,4 (PARA 5125) (PARA 5132) (PARA 200,208,220 Y 240V)	RONDELLE.B DIN125-ST BICR.8,4 (POUR 5125) (POUR 5132) (POUR 200,208,220 ET 240V)
57	276162	SIDE COVER GUIDE	GUIA TAPA LATERAL	GUIDE COUVERCLE LATERALE
58	192856	HEX SCREW 8G DIN 933 M 6X 25	TOR.EX.DIN933-8.8 B.TRI.M 6X25	VIS HEX.8G DIN 933 M 6X 25
62	289504	SEPARATOR 22X 9X 35	SEPARADOR 20X 9X35	SEPARATEUR 22X 9X 35
63	307603	SCREW HEX.DIN933-8.8 BIC.M8X50	TOR.EX.DIN933-8.8 B.TRI.M 8X50	VIS.HEX.DIN933-8.8 BICR.M8X 50
64	146373	BICR.HEX SCREW DIN933-8 M 8X10	TOR.EX.DIN933-8.8 B.TRI.M 8X10	VIS HEX BICR.DIN933-8.8 M 8X10
65	150201	BICR.HEX NUT DIN 934-8 M-8	TUER.EX.DIN934-8 B.TRI.M 8	ECROU HEX.DIN 934-8 BICR.M-8

Nº	REF	DENOMINATION	DENOMINACIÓN	DENOMINATION
		FROM MACHINE Nr:	A PARTIR DE LA MAQUINA No :	A PARTIR DE LA MACHINE NR:
		615.050 620.502 625.353 630.790	615.050 620.502 625.353 630.790	615.050 620.502 625.353 630.790
43	326223	CONTACTOR 3RT10 26-1AL200 (FOR 5115) (FOR 5119)	CONTACTOR 3RT10 26-1AL200 (PARA 5115) (PARA 5119)	CONTACTEUR 3RT10 26-1AL200 (POUR 5115) (POUR 5119)
	321240	COIL 3RT1924-5AL21 230-50/60	BOBINA 3RT1924-5AL21 230-50/60	BOBINE 3RT1924-5AL21 230-50/60
	320853	CONTACTOR 3RT10 34-1AL2 (FOR 5125) (FOR 5132)	CONTACTOR 3RT10 34-1AL2 (PARA 5125) (PARA 5132)	CONTACTEUR 3RT10 34-1AL2 (POUR 5125) (POUR 5132)
	321257	COIL 3RT1934-5AL21 230-50/60	BOBINA 3RT1934-5AL21 230-50/60	BOBINE 3RT1934-5AL21 230-50/60
44	311696	AUX.CONTACT BLOCK3RH1921-1CA01	BLOQUE CONTAC.AUX3RH1921-1CA01	BLOC CONTACT AUX.3RH1921-1CA01
45	326223	CONTACTOR 3RT10 26-1AL200 (FOR 5115) (FOR 5119) (FOR 200,208,220 AND 380V)	CONTACTOR 3RT10 26-1AL200 (PARA 5115) (PARA 5119) (PARA 200,208,220 Y 380V)	CONTACTEUR 3RT10 26-1AL200 (POUR 5115) (POUR 5119) (POUR 200,208,220 ET 380V)
	321240	COIL 3RT1924-5AL21 230-50/60	BOBINA 3RT1924-5AL21 230-50/60	BOBINE 3RT1924-5AL21 230-50/60
	320853	CONTACTOR 3RT10 34-1AL2 (FOR 5125) (FOR 5132) (FOR 200,208,220 AND 380V)	CONTACTOR 3RT10 34-1AL2 (PARA 5125) (PARA 5132) (PARA 200,208,220 Y 380V)	CONTACTEUR 3RT10 34-1AL2 (POUR 5125) (POUR 5132) (POUR 200,208,220 ET 380V)
	321257	COIL 3RT1934-5AL21 230-50/60	BOBINA 3RT1934-5AL21 230-50/60	BOBINE 3RT1934-5AL21 230-50/60

Nº	REF	DENOMINATION	DENOMINACIÓN	DENOMINATION
		FROM MACHINE Nr:	A PARTIR DE LA MAQUINA No :	A PARTIR DE LA MACHINE NR:
		615.069 620.731 625.535 631.146	615.069 620.731 625.535 631.146	615.069 620.731 625.535 631.146
30	432864	SECTION SWITCH BRACKET	SOPORTE SECCIONADOR	SUPPORT SECCTIONNEUR
31	344499	SECTION SWITCH PS-E 100A 4P (FOR 380,415 AND 440V)	INTERRUPT.SECC. PS-E 100A 4P (PARA 380,415 Y 440V)	INTERRUPTEUR SECC.PS-E 100A 4P (POUR 380,415 ET 440V)
	344481	SECTION SWITCH PS-E 100A 3P (FOR 5115) (FOR 5119) (FOR 200,208 AND 220V)	INTERRUPT.SECC. PS-E 100A 3P (PARA 5115) (PARA 5119) (PARA 200,208 Y 220V)	INTERRUPTEUR SECC.PS-E 100A 3P (POUR 5115) (POUR 5119) (POUR 200,208 ET 220V)
	344507	SECTION SWITH PS-E 200A 3P (FOR 5125) (FOR 5132) (FOR 200,208 AND 220V)	INTERRUPT.SECC. PS-E 200A 3P (PARA 5125) (PARA 5132) (PARA 200,208 Y 220V)	INTERRUPTEUR SECC.PS-E 200A 3P (POUR 5125) (POUR 5132) (POUR 200,208 ET 220V)
32	199745	CANCELLED	ANULADO	ANNULE
	199737	CANCELLED	ANULADO	ANNULE
33	198119	CANCELLED	ANULADO	ANNULE
36	275958	CANCELLED	ANULADO	ANNULE

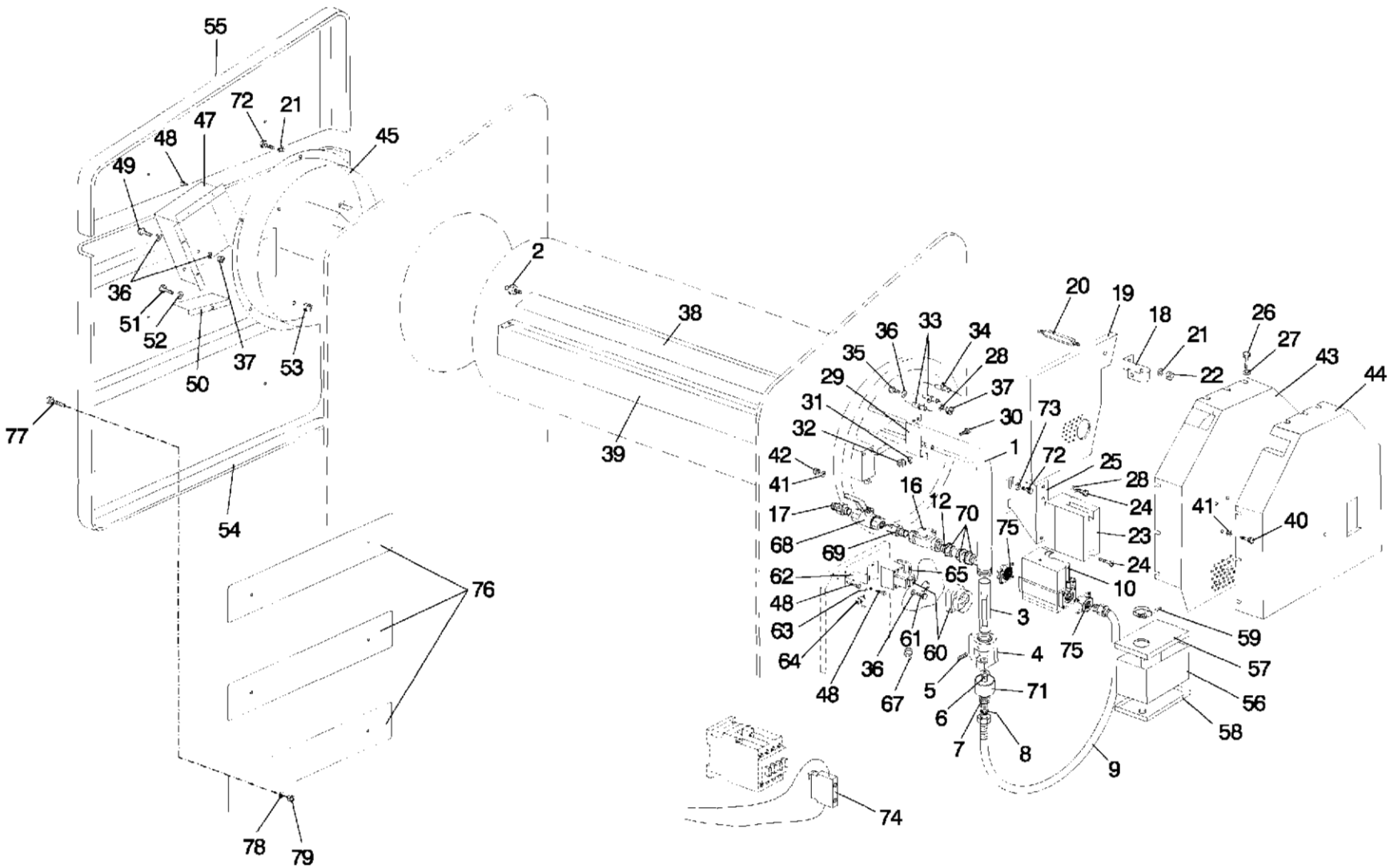
55
72
21
47
48
45
49
36
51
52
50
37
53
77
54
2
38
39
76
78
79
20
19
18
21
22
26
27
43
44
36
33
34
35
28
29
37
31
30
73
32
1
72
25
28
42
41
16
12
70
24
17
68
69
75
23
24
41
40
62
65
10
48
63
3
59
64
61
60
4
75
57
36
5
71
56
48
67
6
58
7
8
9
74

U.13077

Nº	REF	DENOMINATION	DENOMINACIÓN	DENOMINATION
1	273821	BURNER (FOR 5115)	QUEMADOR (PARA 5115)	BRULEUR (POUR 5115)
	271270	BURNER (FOR 5119)	QUEMADOR (PARA 5119)	BRULEUR (POUR 5119)
	271767	BURNER (FOR 5125)	QUEMADOR (PARA 5125)	BRULEUR (POUR 5125)
	268276	BURNER (FOR 5132)	QUEMADOR (PARA 5132)	BRULEUR (POUR 5132)
2	129825	ELBOW FIG. 290 1/2" GALV.	FIGURA 290 DE 1/2" GALV.	COUDE FIG. 290 1/2" GALV.
3	268227	VENTURI HOSE	TUBO VENTURI	TUBE VENTURI
4	268177	INJECTOR BRACKET	SOPORTE INYECCION	SUPPORT INJECTEUR
5	144113	ALLEN BUMP DIN 916 M-6X20	ESP.ALL.DIN916-10.9 M 6X20	GOUJON ALLEN DIN 916 M-6X20
6	275818	INJECTOR (FOR 5115) (FOR GLP G-31-37 MBAR)	INYECTOR (PARA 5115) (PARA GLP G-31-37 MBAR)	INJECTEUR (POUR 5115) (POUR GLP G-31-37 MBAR)
	284745	INJECTOR (FOR 5115) (FOR GLP G-31-50 MBAR)	INYECTOR (PARA 5115) (PARA GLP G-31-50 MBAR)	INJECTEUR (POUR 5115) (POUR GLP G-31-50 MBAR)
	275792	INJECTOR (FOR 5119) (FOR GLP G-31-37 MBAR)	INYECTOR (PARA 5119) (PARA GLP G-31-37 MBAR)	INJECTEUR (POUR 5119) (POUR GLP G-31-37 MBAR)
	284729	INJECTOR (FOR 5119) (FOR GLP G-31-50 MBAR)	INYECTOR (PARA 5119) (PARA GLP G-31-50 MBAR)	INJECTEUR (POUR 5119) (POUR GLP G-31-50 MBAR)
	275776	INJECTOR (FOR 5125) (FOR GLP G-31-37 MBAR)	INYECTOR (PARA 5125) (PARA GLP G-31-37 MBAR)	INJECTEUR (POUR 5125) (POUR GLP G-31-37 MBAR)
	284703	INJECTOR (FOR 5125) (FOR GLP G-31-50 MBAR)	INYECTOR (PARA 5125) (PARA GLP G-31-50 MBAR)	INJECTEUR (POUR 5125) (POUR GLP G-31-50 MBAR)
	270033	INJECTOR (FOR 5132) (FOR GLP G-31-37 MBAR)	INYECTOR (PARA 5132) (PARA GLP G-31-37 MBAR)	INJECTEUR (POUR 5132) (POUR GLP G-31-37 MBAR)
	284687	INJECTOR (FOR 5132) (FOR GLP G-31-50 MBAR)	INYECTOR (PARA 5132) (PARA GLP G-31-50 MBAR)	INJECTEUR (POUR 5132) (POUR GLP G-31-50 MBAR)
	284737	INJECTOR (FOR 5115) (FOR NATURAL GAS)	INYECTOR (PARA 5115) (PARA GAS NATURAL)	INJECTEUR (POUR 5115) (POUR GAZ NATUREL)

Nº	REF	DENOMINATION	DENOMINACIÓN	DENOMINATION
	284711	INJECTOR (FOR 5119) (FOR NATURAL GAS)	INYECTOR (PARA 5119) (PARA GAS NATURAL)	INJECTEUR (POUR 5119) (POUR GAZ NATUREL)
	284695	INJECTOR (FOR 5125) (FOR NATURAL GAS)	INYECTOR (PARA 5125) (PARA GAS NATURAL)	INJECTEUR (POUR 5125) (POUR GAZ NATUREL)
	284679	INJECTOR (FOR 5132) (FOR NATURAL GAS)	INYECTOR (PARA 5132) (PARA GAS NATURAL)	INJECTEUR (POUR 5132) (POUR GAZ NATUREL)
7	268169	INJECTOR HOLDER	PORTA INYECTOR	PORTE-INJECTEUR
8	199497	GASKET TEFLON D23 XD 18X1,5	JUNTA TEFLON D23 XD18X2	JOINT TEFLON D23 XD 18X1,5
9	198457	PRESINOX-GAS HOSE MG3434-2768	TUBO FLEX.EXTEN.INOX GM200521*	TUBE PRESINOX-GAZ MG3434-2768
10	300285	GAS VALVE 2 COIL BM762-012	VALVULA GAS 2 BOBIN.BM762-012	VANNE GAZ 2 BOBIN.BM762-012
12	289405	GAS INLET HOSE	TUBO ENTRADA GAS	TUBE ENTREE GAZ
16	198465	FILTER FOR GAS MOD. 70608 3/4"	FILTRO PARA GAS MOD.70608 3/4"	FILTRE POUR GAZ MOD.70608 3/4"
17	276014	GAS INLET	ENTRADA GAS	ENTRÉE GAZ
18	270207	BURNER CLAMP	BRIDA QUEMADOR	BRIDE BRULEUR
19	273169	CHAIN PROTECTION COVER	TAPA PROTECCION CADENAS	COUVERCLE PROTECTION CHAIN
20	289181	PROTECTION COVER BOLT	PERNO TAPA PROTECCION	GOUJON COUVERCLE PROTECTION
21	149708	BICR.EXT.TOOT.WASH.DIN6798 M8	ARAN.DEN.EXT.B.TRI.DIN6798M 8	RONDEL.DEN.EX.BICR.DIN6798 M8
22	150201	BICR.HEX NUT DIN 934-8 M-8	TUER.EX.DIN934-8 B.TRI.M 8	ECROU HEX.DIN 934-8 BICR.M-8
23	199125	LIGHTER RV 05132107	DISP.DE ENCENDIDO RV 05132107*	DISP-D'ALLUMAGE RV 05132107
24	193631	CYL PLATE SCREW DIN7971 6X5/8"	TOR.CHAPA CILI.DIN7971 6X5/8"	VIS PLAQU CYL DIN7971 6X5/8"
25	270959	IGNITOR BRACKET	SOPORTE ENCENDEDOR	SUPPORT ALLUMEUR
27	149526	BICR.WASHER B DIN125-ST 6,4	ARAN.B DIN125-ST B.TRI. 6,4	RONDELLE B DIN125-ST BICR.6,4
28	149732	BICR.EXT TOOT.WASH DIN6798 M4	ARAN.DEN.EXT.B.TRI.DIN6798M 4	RONDEL.DEN.EX.BICR.DIN6798 M4
29	268300	ELECTRODE BRACKET	SOPORTE ELECTRODOS	SUPPORT ELECTRODES
30	146274	BICR.HEX SCREW DIN933-8 M-5X10	TOR.EX.DIN933-8.8 B.TRI.M 5X10	VIS HEX.BICR.DIN933-8.8 M-5X10
31	149534	BICR.WASHER B DIN125-ST 5,3	ARAN.B DIN125-ST BICR. 5,3	RONDELLE B BICR.DIN125-ST 5,3
32	150177	BICR HEX NUT DIN934-8 M5	TUER.EX.DIN934-8 B.TRI.M 5	ECROU HEX DIN934-8 BIC.M5
33	199083	ELECTRODE HT RV 14061860	ELECTRODO HT RV 14061860	ELECTRODE HT RV 14061860

Nº	REF	DENOMINATION	DENOMINACIÓN	DENOMINATION
34	191890	ELECTRODE RV 14210220	ELECTRODO RV 14210220	ELECTRODE RV 14210220
35	146258	BIC.HEX SCREW DIN933-4.8 M4X10	TOR.EX.DIN933-4.8 B.TRI.M 4X10	VIS HEX DIN933-4.8 BICR.M 4X10
36	149476	BICR.WASHER B DIN125-ST 4,3	ARAN.B DIN125-ST B.TRI. 4,3	RONDELLE B DIN125-ST BICR.4,3
37	150185	BICR.HEX.NUT DIN934-8 M4	TUER.EX.DIN934-8 B.TRI.M 4	ECROU HEX.DIN934-8 BICR.M4
38	274753	STEAMS DUCT (FOR 5115)	CONDUCTO HUMOS (PARA 5115)	CONDUIT BUEES (POUR 5115)
	274738	STEAMS DUCT (FOR 5119)	CONDUCTO HUMOS (PARA 5119)	CONDUIT BUEES (POUR 5119)
	274712	STEAMS DUCT (FOR 5125)	CONDUCTO HUMOS (PARA 5125)	CONDUIT BUEES (POUR 5125)
	268557	STEAMS DUCT (FOR 5132)	CONDUCTO HUMOS (PARA 5132)	CONDUIT BUEES (POUR 5132)
39	275016	STEAMS INTAKE HOSE (FOR 5115)	TUBO ASPIRACION GASES (PARA 5115)	TUBE ASPIRATION BUEES (POUR 5115)
	274969	STEAMS INTAKE HOSE (FOR 5119)	TUBO ASPIRACION GASES (PARA 5119)	TUBE ASPIRATION BUEES (POUR 5119)
	274902	STEAMS INTAKE HOSE (FOR 5125)	TUBO ASPIRACION GASES (PARA 5125)	TUBE ASPIRATION BUEES (POUR 5125)
	268623	STEAMS INTAKE HOSE (FOR 5132)	TUBO ASPIRACION GASES (PARA 5132)	TUBE ASPIRATION BUEES (POUR 5132)
40	144923	INOX HEX.SCREW DIN 933 M-6X20	TOR.EX.DIN933INOX A2-70 M 6X20	VIS HEX INOX DIN 933 M-6X20
41	149310	INOX.A2 WASHER DIN125 6,4	ARAN. DIN125 INOX A2 6,4	RONDELLE INOX.A2 DIN125 6,4
42	149971	INOX. HEX. NUT DIN 934 M-6	TUER.EX.DIN934 INOX A2-70 M 6	ECROU HEX. INOX. DIN 934 M-6
43	268466	ROLL RIGHT COVER	TAPA DERECHA RODILLO	COUVERCLE DROITE ROULEAU
44	197111	RIGHT COVER ISOLATION	AISLANTE TAPA DERECHA	ISOLANT COUVERCLE DROITE
45	268318	ROLL LEFT COVER	TAPA IZQUIERDA RODILLO	COUVERCLE GAUCHE ROULEAU
46	149716	BICR.EXT TOOT.WASH.DIN6798 M6	ARAN.DEN.EXT.B.TRI.DIN6798M 6	RONDEL.DEN.EX.BICR DIN6798 M6
47	271320	STEAM DUCT	CONDUCTO HUMOS	CONDUIT BUEES
48	183400	CYL.PLATE SCREW ST-4 20 C/AL	TOR.CHAPA ST-4 20 C/AL.T25	VIS PLAQUE CYL.ST-4 20 C/AL
49	146266	BICR.HEX SCREW DIN933-8 M-4X15	TOR.EX.DIN933-4.8 B.TRI.M 4X15	VIS HEX BICR.DIN933-8.8 M-4X15
50	267963	LOCKING COVER	MARIPOSA	FERMETURE
51	144782	INOX HEX SCREW DIN933 M 5X15	TOR.EX.DIN933INOX A2-70 M 5X15	VIS HEX INOX DIN933 M 5X15

Nº	REF	DENOMINATION	DENOMINACIÓN	DENOMINATION
52	149369	INOX A2 WASHER DIN 125 5,3	ARAN. DIN125 INOX A2 5,3	RONDELLE INOX A2 DIN 125 5,3
53	183541	CYLIN. NUT M5 R-310077-3	TUER.ENJ.M5 CILINDR.R-310077-3	ECROU M5 CYLIN. R-310077-3
54	196550	SIDE COVER ISOLATION	AISLANTE TAPA LATERAL	ISOLANT COUVERCLE LATERALE
55	197798	SIDE COVER ISOLATION	AISLANTE TAPA LATERAL	ISOLANT COUVERCLE LATERALE
56	268235	GAS FILTER	FILTRO GAS	FILTRE GAZ
57	268185	FILTER COVER	TAPA FILTRO	COUVERCLE FILTRE
58	268193	FILTER COVER	TAPA FILTRO	COUVERCLE FILTRE
59	132282	CLAMP 301527-3 D32-50	ABRAZADERA 32- 50 *	BRIDE 301527-3 DSA-50
60	198861	GRAL.SWITCH P1-25/V/SVB	INTERRUPT.GENERAL P1-25/V/SVB	INTERRUPTEUR GRAL.P1-25/V/SVB
61	146084	BICR CYL SCREW DIN84 M 4X 10	TOR.CIL.DIN84-4.8 B.TRI.M 4X10	VIS CYL BICR DIN84-4.8 M 4X 10
62	274522	DISCONNECTOR BRACKET	SOPORTE SECCIONADOR	SUPPORT SECTIONNEUR
63	199281	CLAMP BRACKET TA2-C	SOPORTE BRIDA TA2-C	SUPPORT BRIDE TA2-C
64	199299	CLAMP PRT1.5S-C	BRIDA RECUPERABLE PRT1.5S-C	BRIDE PRT1.5S-C
65	198879	SECTION.NEUTRE N-P1Z (FOR 380 AND 415V)	NEUTRO SECCIONABLE N-P1Z (PARA 380 Y 415V)	NEUTRE SECCON.N-P1Z (POUR 380 ET 415V)
67	140525	CLAMP 2244-0	BRIDA UNEX 2244-0 *	BRIDE 2244-0
68	304204	VALVE 715 DN20 3/4"	VALVULA DE BOLA 715 DN20(3/4")	VANNE 715 DN20 3/4"
69	304220	MALE DOUBLE JOINTING 3/4"	UNION DOBLE MACHO 3/4 01212727	UNION DOUBLE MALE 3/4"
70	306258	BRASS NUT 3/4"	TUERCA LATON CON VALONA 3/4"	ECROU LAITON 3/4"
71	284646	PRIMARY DEFLECTOR (FOR 5115) (FOR 5119)	DEFLECTOR PRIMARIO (PARA 5115) (PARA 5119)	DEFLECTEUR PRIMAIRE (POUR 5115) (POUR 5119)
72	146373	BICR.HEX SCREW DIN933-8 M 8X10	TOR.EX.DIN933-8.8 B.TRI.M 8X10	VIS HEX BICR.DIN933-8.8 M 8X10
73	149518	BICR.WASHER B DIN125-ST 8,4	ARAN.B DIN125-ST B.TRI. 8,4	RONDELLE.B DIN125-ST BICR.8,4
74	193458	AUX. CONTACT BLOCK 3TX4010-2A	BLOQUE CONTAC.AUX.3TX4010-2 ZZ	BLOC CONTACT AUX. 3TX4010-2A
75	307793	CLAMP 3/4" + JOINT + 4 SCREW	BRIDA RECTA 3/4"+JUNTA+4 TOR.*	BRIDE 3/4"+JOINT+4 VIS
76	354522	ISOLATION FIXING	FIJACION AISLANTE	FIXATION ISOLANT
77	453811	INOX FLAT SCREW DIN85 A2-70 M6X40	TOR.PLA.DIN85 INOX A2-70 M6X40	VIS PLAT DIN85 INOX A2-70 M6X40
78	149310	INOX.A2 WASHER DIN125 6,4	ARAN. DIN125 INOX A2 6,4	RONDELLE INOX.A2 DIN125 6,4
79	149971	INOX. HEX. NUT DIN 934 M-6	TUER.EX.DIN934 INOX A2-70 M 6	ECROU HEX. INOX. DIN 934 M-6

Nº	REF	DENOMINATION	DENOMINACIÓN	DENOMINATION
		FROM MACHINE Nr:	A PARTIR DE LA MAQUINA No :	A PARTIR DE LA MACHINE NR:
		615.023 620.219 625.155 630.294	615.023 620.219 625.155 630.294	615.023 620.219 625.155 630.294
10	307785	GAS VALVE 2 COIL BM762-012	VALVULA GAS 2 BOBIN.BM762-012*	VANNE GAZ 2 BOBINE BM762-012
	307793	CLAMP 3/4" + JOINT + 4 SCREW	BRIDA RECTA 3/4"+JUNTA+4 TOR.*	BRIDE 3/4"+JOINT+4 VIS

Nº	REF	DENOMINATION	DENOMINACIÓN	DENOMINATION
		FROM MACHINE Nr:	A PARTIR DE LA MAQUINA No :	A PARTIR DE LA MACHINE NR:
		615.050 620.502 625.353 630.790	615.050 620.502 625.353 630.790	615.050 620.502 625.353 630.790
74	326298	AUX.CONTACT BLOCK3RH1911-1AA10	BLOQUE CONTAC.AUX3RH1911-1AA10	BLOC CONTACT AUX.3RH1911-1AA10

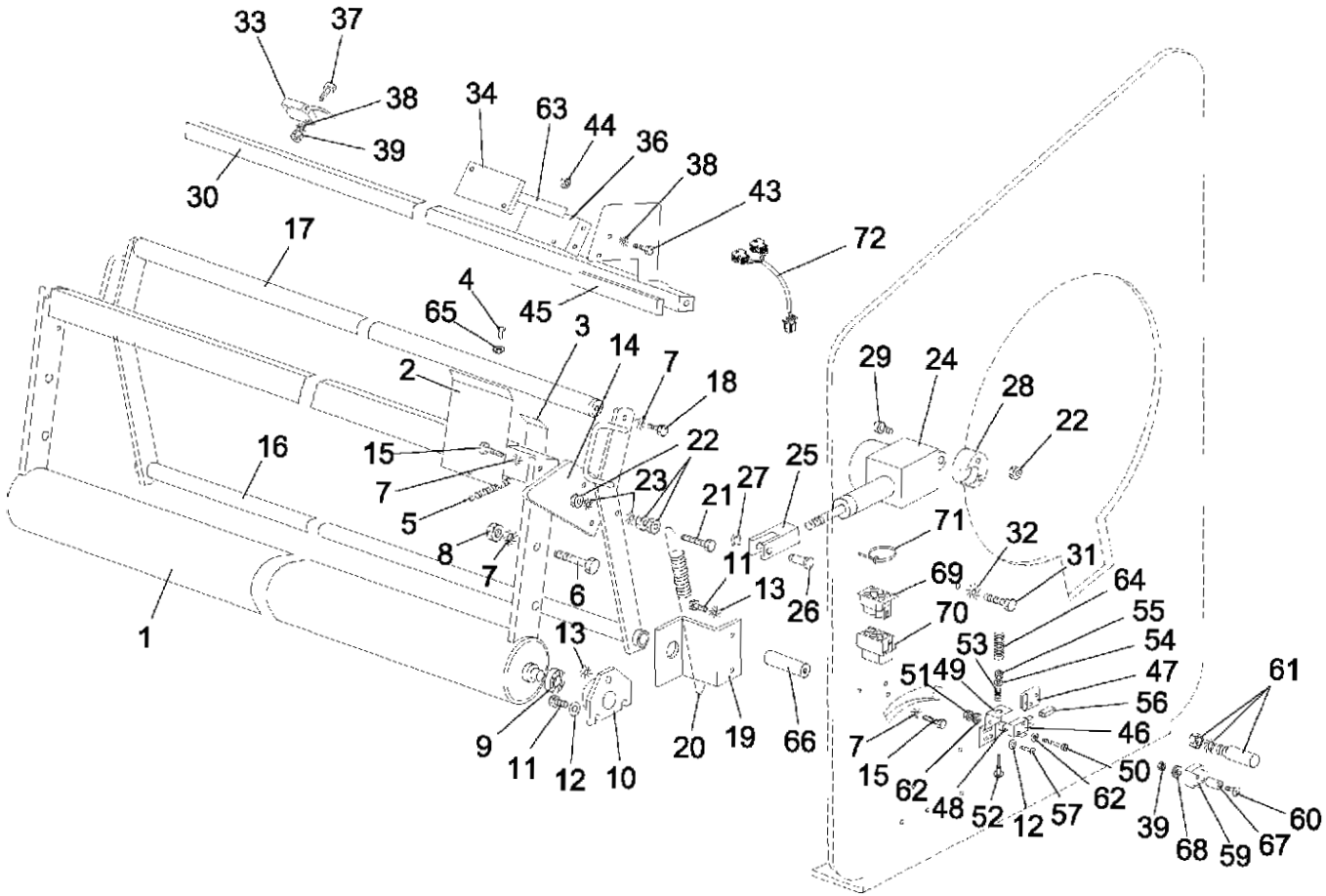
33
37
38
39
30
34
63
44
36
38
43
72
17
4
65
45
3
14
7
18
2
29
24
28
22
16
15
7
5
22
23
21
27
25
71
32
31
8
7
6
11
13
26
69
64
70
55
53
54
1
13
51
49
47
61
56
46
9
11
12
10
20
19
66
7
15
62
48
52
12
57
62
50
39
68
59
67
60

U.13078

Nº	REF	DENOMINATION	DENOMINACIÓN	DENOMINATION
1	273813	FOLDER (FOR 5115) (INCLUDING BLADE)	PLEGADOR (PARA 5115) (INCLUYE PALAS)	PLIEUSE (POUR 5115) (COMPRIS PELLE DE GUIDAGE)
	273805	FOLDER (FOR 5119) (INCLUDING BLADE)	PLEGADOR (PARA 5119) (INCLUYE PALAS)	PLIEUSE (POUR 5119) (COMPRIS PELLE DE GUIDAGE)
	273797	FOLDER (FOR 5125) (INCLUDING BLADE)	PLEGADOR (PARA 5125) (INCLUYE PALAS)	PLIEUSE (POUR 5125) (COMPRIS PELLE DE GUIDAGE)
	273789	FOLDER (FOR 5132) (INCLUDING BLADE)	PLEGADOR (PARA 5132) (INCLUYE PALAS)	PLIEUSE (POUR 5132) (COMPRIS PELLE DE GUIDAGE)
2	270363	FOLDER BLADE	ASPA PLEGADOR	PELLE DE GUIDAGE DU PLIEUSE
3	270397	END PIECE BLADE	TOPE ASPA	ARRET PELLE DE GUIDAGE
4	151878	RIVET POP TLP/D/636/BS4,8X 9,1	REMA.POP TLP/D/636/BS 4,8X 9,1	RIVET TLP/D/636/BS 4,8X 9,1
5	192344	SPRING D 6X0,7	MUELLE TRACCION D 6X0,7	RESSORT D 6X0,7
6	191700	HEX SCREW 8G DIN931 M 8X100	TOR.EX.DIN931-8.8B.TRI.M 8X100	VIS HEX 8G DIN931 M 8X100
7	149708	BICR.EXT.TOOT.WASH.DIN6798 M8	ARAN.DEN.EXT.B.TRI.DIN6798M 8	RONDEL.DEN.EX.BICR.DIN6798 M8
8	150201	BICR.HEX NUT DIN 934-8 M-8	TUER.EX.DIN934-8 B.TRI.M 8	ECROU HEX.DIN 934-8 BICR.M-8
9	142828	SPECIAL BEARING	RODAMIENTO ESPECIAL	ROULEMENT SPECIAL
10	269712	ROLL BRACKET	SOPORTE RODILLOS	SUPPORT ROULEAU
11	166652	BIC.HEX SCREW DIN933-8.8 M8X15	TOR.EX.DIN933-8.8 B.TRI.M 8X15	VIS HEX DIN933-8.8 BICR. M8X15
12	149518	BICR.WASHER B DIN125-ST 8,4	ARAN.B DIN125-ST B.TRI. 8,4	RONDELLE.B DIN125-ST BICR.8,4
13	149708	BICR.EXT.TOOT.WASH.DIN6798 M8	ARAN.DEN.EXT.B.TRI.DIN6798M 8	RONDEL.DEN.EX.BICR.DIN6798 M8
14	270496	FOLDER CAM	LEVA PLEGADOR	LEVE PLIEUSE
15	192849	BIC.HEX SCREW DIN933-8 M-8X25	TOR.EX.DIN933-8.8 B.TRI.M 8X25	VIS HEX.DIN933-8,8 BICR.M-8X25
16	274571	AWNING BRACKET (FOR 5115)	SOPORTE LONA (PARA 5115)	SUPPORT BACHE (POUR 5115)
	274555	AWNING BRACKET (FOR 5119)	SOPORTE LONA (PARA 5119)	SUPPORT BACHE (POUR 5119)
	274530	AWNING BRACKET (FOR 5125)	SOPORTE LONA (PARA 5125)	SUPPORT BACHE (POUR 5125)
	270652	AWNING BRACKET (FOR 5132)	SOPORTE LONA (PARA 5132)	SUPPORT BACHE (POUR 5132)

Nº	REF	DENOMINATION	DENOMINACIÓN	DENOMINATION
17	274498	AWNING BRACKET HOSE (FOR 5115)	TUBO SOPORTE LONA (PARA 5115)	TUBE SUPPORT BACHE (POUR 5115)
	274472	AWNING BRACKET HOSE (FOR 5119)	TUBO SOPORTE LONA (PARA 5119)	TUBE SUPPORT BACHE (POUR 5119)
	274456	AWNING BRACKET HOSE (FOR 5125)	TUBO SOPORTE LONA (PARA 5125)	TUBE SUPPORT BACHE (POUR 5125)
	270587	AWNING BRACKET HOSE (FOR 5132)	TUBO SOPORTE LONA (PARA 5132)	TUBE SUPPORT BACHE (POUR 5132)
18	146399	BICR HEX SCREW DIN933-8 M8X20	TOR.EX.DIN933-8.8 B.TRI.M 8X20	VIS HEX DIN933-8.8 BICR.M8X20
19	270637	BRACKET ASSEMBLY	APOYO SOPORTE	APPUI SUPPORT
20	196642	AWNIN BRACKET SPRING	MUELLE SOPORTE LONA	RESSORT SUPPORT BACHE
21	147017	BICR.HEX SCREW DIN933-8 M10X40	TOR.EX.DIN933-8.8 B.TRI.M10X40	VIS HEX DIN933-8,8 BICR.M10X40
22	150193	BICR HEX NUT DIN 934-8 M10	TUER.EX.DIN934-8 B.TRI.M10	ECROU HEX DIN 934-8 BICR.M10
23	149690	BICR.EXT TOOT.WASH.DIN6798 M10	ARAN.DEN.EXT.B.TRI.DIN6798M10	RONDEL DEN EX.BICR.DIN6798 M10
24	275131	ACTUATOR	ACTUADOR	ACTUATOR
25	270553	ACTUATOR FORK	HORQUILLA ACTUADOR	FOURCHETTE ACTUATOR
26	270983	FORK BOLT	BULON HORQUILLA	FOURCHETTE BOULON
27	178186	FLEXIBLE RING E-12 DIN 471	ANILLO ELASTICO E-12 DIN 471	BAGUE ELASTIQUE E-12 DIN 471
28	270603	ACTUATOR HINGE	CHARNELA ACTUADOR	CHARNIERE ACTUATOR
29	181818	SCREW ALLEN DIN912 M10X60	TOR.ALLDIN912-8.8 B.TRI.M10X60	VIS ALLEN DIN912 M10X60
30	273920	SEPARATORS ASSEMBLY (FOR 5115)	CONJUNTO SEPARADORES (PARA 5115)	ENSEMBLE SEPARATEURS (POUR 5115)
	273912	SEPARATORS ASSEMBLY (FOR 5119)	CONJUNTO SEPARADORES (PARA 5119)	ENSEMBLE SEPARATEURS (POUR 5119)
	273904	SEPARATORS ASSEMBLY (FOR 5125)	CONJUNTO SEPARADORES (PARA 5125)	ENSEMBLE SEPARATEURS (POUR 5125)
	270181	SEPARATORS ASSEMBLY (FOR 5132)	CONJUNTO SEPARADORES (PARA 5132)	ENSEMBLE SEPARATEURS (POUR 5132)
31	116764	HEX SCREW 8G DIN933 M-12X25	TOR.EX.DIN933-8.8 B.TRI.M12X25	VIS HEX. 8G DIN933 M-12X25
32	149682	BICR.EXT.TOOT.WASH.DIN6798 M12	ARAN.DEN.EXT.B.TRI.DIN6798M12	RONDEL.DEN.EX.BICR.DIN6798 M12
33	284794	PHOTOELECTRIC CELL (INCLUDING REFLECTOR)	CELULA FOTOELECTRICA (INCLUYE REFLECTOR)	CEULE PHOTOELECTRIQUE (COMPRIS REFLECTEUR)
34	197533	REFLECTOR OMROM E39-R1	REFLECTOR OMRON E39-R1	REFLECTEUR OMRON E39-R1

Nº	REF	DENOMINATION	DENOMINACIÓN	DENOMINATION
36	270009	REFLECTOR BRACKET	SOPORTE REFLECTOR	SUPPORT REFLECTEUR
37	146183	BICR CYL SCREW DIN 84 M-4X25	TOR.CIL.DIN84-4.8 B.TRI.M 4X25	VIS CYL BICR DIN 84 M-4X25
38	149732	BICR.EXT TOOT.WASH DIN6798 M4	ARAN.DEN.EXT.B.TRI.DIN6798M 4	RONDEL.DEN.EX.BICR.DIN6798 M4
39	150185	BICR.HEX.NUT DIN934-8 M4	TUER.EX.DIN934-8 B.TRI.M 4	ECROU HEX.DIN934-8 BICR.M4
43	146258	BIC.HEX SCREW DIN933-4.8 M4X10	TOR.EX.DIN933-4.8 B.TRI.M 4X10	VIS HEX DIN933-4.8 BICR.M 4X10
44	150185	BICR.HEX.NUT DIN934-8 M4	TUER.EX.DIN934-8 B.TRI.M 4	ECROU HEX.DIN934-8 BICR.M4
45	101014	PROFILE ADHESIVE 25X6 (1 METER)	PERF.AUTOAD.ESPONJ.NEOPR.25 X6 (1 METRO)	PROFILE ADHESIVE 25X6 (1 METRE)
46	197046	MINISWITCH 83161.344 I W3	MINIRRUPTOR 83161.344 I W3	MINIRRUPTEUR 83161.344 I W3
47	281113	MICROSWITCH ISOLATION	AISLANTE MICRORRUPTOR	ISOLANT MICRORRUPTEUR
48	175364	PLASTIC SEPARATOR 6MM SP78/10	SEPARADOR PLASTICO 6MM.SP78/10	SEPARATEUR PLASTIQUE 6MM
49	291229	MICROSWITCH DRIVE BRACKET	SOPORTE ACCIONADOR MICRORRUP.	SUPPORT ACCIONAMENT MICRORRUP.
50	302554	CYL.BICR.SCREW DIN84-4.8 M3X25	TOR.CIL.DIN84-4.8 B.TRI.M 3X25	VIS.CYL DIN84-4.8 BICR M 3X25
51	149906	INOX. HEX. NUT DIN 934 M-3	TUER.EX.DIN934 INOX A2-70 M 3	ECROU HEX. INOX DIN934 M-3
52	283291	MICROSWITCH DRIVE	ACCIONADOR MINIRRUPTOR	ACCIONAMENT MICRORRUPTEUR
53	189399	MICROSWITCH DRIVE SPRING	MUELLE ACCIONADOR MICRORRUPTOR	RESSORT ACTIONNEMENT MICRORRUP
54	149534	BICR.WASHER B DIN125-ST 5,3	ARAN.B DIN125-ST BICR. 5,3	RONDELLE B BICR.DIN125-ST 5,3
55	147918	QUICK FIXING 211039-6	SUJEC.RAPIDA MIKALOR 211039-6	FIXATION RAPIDE 211039-6
56	159376	TERMINAL PROTECTOR	PROTECTOR LENGÜETA	PROTECTEUR LANGUETTE
57	146373	BICR.HEX SCREW DIN933-8 M 8X10	TOR.EX.DIN933-8.8 B.TRI.M 8X10	VIS HEX BICR.DIN933-8.8 M 8X10
59	175224	RECTIFIER BRIDGE FB1010	PUENTE RECTIFIC.FAGOR FB1010 *	PONT RECTIFIEUR FB1010
60	199240	BICR.SCREW DIN963-4.8 M4X30	TOR.AV.DIN963-4.8 B.TRI M 4X30	VIS T/FRAIS.DIN963-4 BIC.M4X30
61	152686	CAPACITOR 3MF 45V F DOUBLE	CONDENSADOR 3MF 450V.F.DOBLE*	CONDENSATEUR 3MF 45OV F.DOUBLE
62	149484	BICR.WASHER B DIN125-ST 3,2	ARAN.B DIN125-ST B.TRI. 3,2	RONDELLE B.DIN125-ST BICR. 3,2
63	302729	ADHESIVE TAPE 4945 12 MM (1 METER)	CINTA ADHESIVA 4945 12MM * (1 METRO)	RUBAN ADHESIVE 4945 12 MM (1 METRE)
64	303362	FOLDER SPRING	MUELLE PLEGADOR	RESSORT PLIEUSE
65	149310	INOX.A2 WASHER DIN125 6,4	ARAN. DIN125 INOX A2 6,4	RONDELLE INOX.A2 DIN125 6,4
66	273086	TRAY BAR END-PIECE	TOPE BARRA BANDEJA	ARRET BARRE PLATEAU

Nº	REF	DENOMINATION	DENOMINACIÓN	DENOMINATION
67	300467	CYLINDER SEPARATOR SS10-4 CPVC	SEPARADOR CILINDR.SS10-4 CPVC	SEPARATEUR CYLINDR.SS10-4 CPVC
68	149476	BICR.WASHER B DIN125-ST 4,3	ARAN.B DIN125-ST B.TRI. 4,3	RONDELLE B DIN125-ST BICR.4,3
69	139394	PROTECTOR 1/480704-0	PROTECTOR 1/480704-0	PROTECTEUR 1/480704-0
70	139444	PROTECTOR 1/480705-0	PROTECTOR 1/480705-0	PROTECTEUR 1/480705-0
71	140525	CLAMP 2244-0	BRIDA UNEX 2244-0 *	BRIDE 2244-0
72	291237	2 PHOTOCELLS INST. (ONLY FOR 2 PHOTOCELLS)	INST.2 FOTOCELULAS (SOLO PARA 2 FOTOCELULAS)	INST.2 PHOTOCELLULES (SEULEMENT POUR 2 PHOTOCELLULES)
		2 PHOTOCELLS KIT	KIT 2 FOTOCELULAS	KIT 2 PHOTOCELLULES
501	793877	2 PHOTOCELLS KIT PSP-5125	KIT 2 FOTOCELULAS PSP-5125	KIT 2 PHOTOCELLULES PSP-5125
502	793885	2 PHOTOCELLS KIT PSP-5132	KIT 2 FOTOCELULAS PSP-5132	KIT 2 PHOTOCELLULES PSP-5132

Nº	REF	DENOMINATION	DENOMINACIÓN	DENOMINATION
		FROM MACHINE Nr: 615.071 620.776 625.565 631.256	A PARTIR DE LA MAQUINA No : 615.071 620.776 625.565 631.256	A PARTIR DE LA MACHINE NR: 615.071 620.776 625.565 631.256
36	444505	REFLECTOR BRACKET	SOPORTE REFLECTOR	SUPPORT REFLECTEUR
63	444513	REFLECTOR INSULATING PLATE	PLACA AISLANTE REFLECTOR	PLAQUE ISOLANTE REFLECTEUR

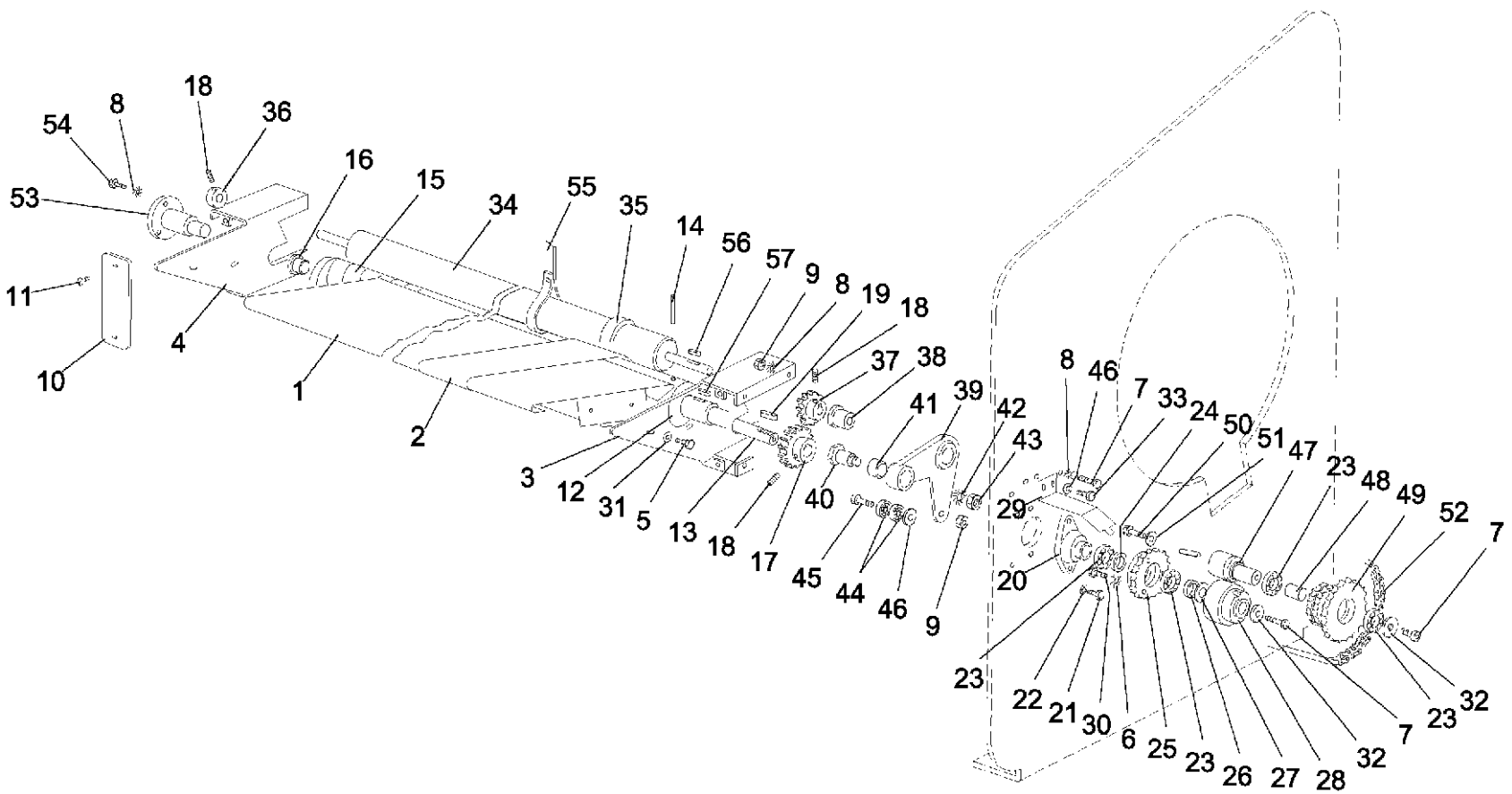
54
8
18
36
53
16
15
34
55
35
14
56
57
9
8
19
18
11
4
10
1
2
37
38
39
41
42
43
8
46
7
33
24
50
51
47
23
48
49
52
7
3
12
31
5
13
18
17
40
45
44
46
9
29
20
23
22
21
30
6
25
23
26
27
28
32
7
23
32
U.13079

Nº	REF	DENOMINATION	DENOMINACIÓN	DENOMINATION
1	275107	CLOTH OUTLET (FOR 5115)	SALIDA ROPA (PARA 5115)	SORTIE LINGE (POUR 5115)
	275073	CLOTH OUTLET (FOR 5119)	SALIDA ROPA (PARA 5119)	SORTIE LINGE (POUR 5119)
	275040	CLOTH OUTLET (FOR 5125)	SALIDA ROPA (PARA 5125)	SORTIE LINGE (POUR 5125)
	273383	CLOTH OUTLET (FOR 5132)	SALIDA ROPA (PARA 5132)	SORTIE LINGE (POUR 5132)
2	198515	CLOTH OUTLET BAND	BANDA SALIDA ROPA	BANDE SORTIE LINGE
3	270249	CLOTH OUTLET BRACKET	SOPORTE SALIDA ROPA	SUPPORT SORTIE LINGE
4	270264	CLOTH OUTLET BRACKET	SOPORTE SALIDA ROPA	SUPPORT SORTIE LINGE
5	146233	BICR.HEX SCREW DIN933-8 M6X15	TOR.EX.DIN933-8.8 B.TRI.M 6X15	VIS HEX DIN933-8.8 BICR.M6X15
6	149716	BICR.EXT TOOT.WASH.DIN6798 M6	ARAN.DEN.EXT.B.TRI.DIN6798M 6	RONDEL.DEN.EX.BICR DIN6798 M6
7	192849	BIC.HEX SCREW DIN933-8 M-8X25	TOR.EX.DIN933-8.8 B.TRI.M 8X25	VIS HEX.DIN933-8,8 BICR.M-8X25
8	149708	BICR.EXT.TOOT.WASH.DIN6798 M8	ARAN.DEN.EXT.B.TRI.DIN6798M 8	RONDEL.DEN.EX.BICR.DIN6798 M8
9	150201	BICR.HEX NUT DIN 934-8 M-8	TUER.EX.DIN934-8 B.TRI.M 8	ECROU HEX.DIN 934-8 BICR.M-8
10	270298	BRACKET COVER	TAPETA SOPORTE	COUVERCLE SUPPORT
11	145656	INOX FLAT SCREW DIN 85 M 5X10	TOR.PLA.DIN85 INOX A2-70 M5X10	VIS PLAT INOX DIN 85 M 5X10 A2
12	274175	CLOTH OUTLET ROLL (FOR 5115) (SHAFT INCLUDED)	RODILLO SALIDA ROPA (PARA 5115) (INCLUYE EJE)	ROULEAU SORTIE LINGE (POUR 5115) (COMPRIS AXE)
	274167	CLOTH OUTLET ROLL (FOR 5119) (SHAFT INCLUDED)	RODILLO SALIDA ROPA (PARA 5119) (INCLUYE EJE)	ROULEAU SORTIE LINGE (POUR 5119) (COMPRIS AXE)
	274142	CLOTH OUTLET ROLL (FOR 5125) (SHAFT INCLUDED)	RODILLO SALIDA ROPA (PARA 5125) (INCLUYE EJE)	ROULEAU SORTIE LINGE (POUR 5125) (COMPRIS AXE)
	270066	CLOTH OUTLET ROLL (FOR 5132) (SHAFT INCLUDED)	RODILLO SALIDA ROPA (PARA 5132) (INCLUYE EJE)	ROULEAU SORTIE LINGE (POUR 5132) (COMPRIS AXE)
13	269084	CLOTH OUTLET SHAFT	EJE SALIDA ROPA	AXE SORTIE LINGE
14	196451	FLEXIBLE PIN DIN1481 D8X60	PASADOR ELASTICO DIN1481 D8X60	GOUJON ELASTIQUE DIN1481 D8X60
15	332866	ADHESIVE POLY RIBBON 50X1.8MM (1 METER)	CINTA POLY-SIL ADHESI.50X1.8MM (1 METRO)	SANGLE POLY-SIL ADHES.50X1.8MM (1 METRE)

Nº	REF	DENOMINATION	DENOMINACIÓN	DENOMINATION
	151993	ADHESIVE FABRIC 50X19 (1 COIL)	TEJIDO VISCOSILLA AUTOAD.50X19 (1 ROLLO)	TISSU ADHÉSIF 50X19 (1 ROULEAU)
16	128983	SELFOIL SLEEVE B11B20-28-25/35	COJ. SELFOIL B11B20-28-25/35-4	FRETTE SELFOIL B11B20-28-25/35
17	303156	CLOTH OUTLET PINION	PIÑON SALIDA ROPA	PIGNON SORTIE LINGE
18	152108	ALLEN BUMP DIN 916 M-6X10	ESP.ALL.DIN916-10.9 M 6X10	GOUJON ALLEN DIN 916 M-6X10
19	198234	PIN DIN 6885-A 35X6X6	CHAVETA DIN 6885-AB 35X6X6	CLAVETTE DIN 6885-AB 35X6X6
20	198218	CLAMP BRACKET ATM UCFL-25	SOPORTE BRIDA ATM UCFL-25	SUPPORT BRIDE ATM UCFL-25
21	147009	HEX SCREW 8G DIN 933 M-10X25	TOR.EX.DIN933-8.8 B.TRI.M10X25	VIS HEX. DIN 933 M-10X25 8G
22	149500	BICR.WASHER B DIN125-ST 10,5	ARAN.B DIN125-ST B.TRI.10,5	RONDELLE B DIN125-ST BICR.10,5
23	128504	BEARING 6004 2RS	RODAMIENTO 6004-2RS	ROULEMENT 6004 2RS
24	269159	SEPARATOR 27X21X4	SEPARADOR 27X21X4	SEPARATEUR 27X21X4
25	269118	CLUTCH PINION	PIÑON EMBRAGUE	PIGNON EMBROYAGE
26	269167	SEPARATOR 27X21X9	SEPARADOR 27X21X9	SEPARATEUR 27X21X9
27	198226	ADJUS.WASHER PS20X28X0,1DIN988	ARAN.AJUSTE PS20X28X0,1 DIN988	RONDEL.AJUST.PS20X28X0,1DIN988
28	198135	CLUTCH 546.15.4.4	EMBRAGUE DENTADO 546.15.3.4 *	EMBRAYAGE 546.15.4.4
29	269225	ANTI-ROTATION PIECE	PIEZA ANTI-ROTACION	PIECE ANTI-ROTATION
30	192385	BICR.HEX.SCREW DIN933-8 M6X35	TOR.EX.DIN933-8.8 B.TRI.M 6X35	VIS.HEX.DIN933-8,8 BICR.M6X35
31	149526	BICR.WASHER B DIN125-ST 6,4	ARAN.B DIN125-ST B.TRI. 6,4	RONDELLE B DIN125-ST BICR.6,4
32	261529	WASHER 25X8,5X4	ARANDELA 25X8.5X4 TRIVALEN.	RONDELLE 25X8,5X4
33	146373	BICR.HEX SCREW DIN933-8 M 8X10	TOR.EX.DIN933-8.8 B.TRI.M 8X10	VIS HEX BICR.DIN933-8.8 M 8X10
34	274324	PLIERS ROLL (FOR 5115)	RODILLO PINZA (PARA 5115)	ROULEAU PINCE (POUR 5115)
	274308	PLIERS ROLL (FOR 5119)	RODILLO PINZA (PARA 5119)	ROULEAU PINCE (POUR 5119)
	274282	PLIERS ROLL (FOR 5125)	RODILLO PINZA (PARA 5125)	ROULEAU PINCE (POUR 5125)
	270413	PLIERS ROLL (FOR 5132)	RODILLO PINZA (PARA 5132)	ROULEAU PINCE (POUR 5132)
35	196535	FLEXIBLE RING	ANILLO ELASTICO	BAGUE ELASTIQUE
	167494	LOCTITE TYPE 406 20 GR.	LOCTITE TIPO 406 20 GR.	LOCTITE TYPE 406 20 GR.
36	270389	PLIERS ROLL END-PIECE	TOPE RODILLO PINZA	ARRET ROULEAU PINCE

Nº	REF	DENOMINATION	DENOMINACIÓN	DENOMINATION
37	303149	PLIERS ROLL PINION	PIÑON RODILLO PINZA	PIGNON ROULEAU PINCE
38	198259	SELFOIL SLEEVE B11B15-20-20/25	COJ. SELFOIL B11B15-20-20/25-3	FRETTE SELFOIL B11B15-20-20/25
39	270306	PLIERS ROLL CONNECTING-ROD	BIELA RODILLO PINZA	BIELLE ROULEAU PINCE
40	270348	CONNECTING-ROD BOLT	BULON BIELA	BOULON BIELLE
41	198242	SELFOIL SLEEVE B11 A15-20-30	COJ. SELFOIL B11A15-20-30	FRETTE SELFOIL.B11 A15-20-30
42	149690	BICR.EXT TOOT.WASH.DIN6798 M10	ARAN.DEN.EXT.B.TRI.DIN6798M10	RONDEL DEN EX.BICR.DIN6798 M10
43	150193	BICR HEX NUT DIN 934-8 M10	TUER.EX.DIN934-8 B.TRI.M10	ECROU HEX DIN 934-8 BICR.M10
44	198275	BEARING 629-2RS	RODAMIENTO 629-2RS	ROULEMENT 629-2RS
45	192831	BICR.HEX SCREW DIN 933-8 M8X30	TOR.EX.DIN933-8.8 B.TRI.M 8X30	VIS HEX DIN 933-8,8 BIC.M8X30
46	149518	BICR.WASHER B DIN125-ST 8,4	ARAN.B DIN125-ST B.TRI. 8,4	RONDELLE.B DIN125-ST BICR.8,4
47	269282	PINION SHAFT	MUÑON PIÑON	AXE PIGNON
48	269357	SEPARATOR 27X21X21,52	SEPARADOR 27X21X21,52	SEPARATEUR 27X21X21,52
49	196311	REVERSE PINION	PIÑON CONTRAMARCHA	PIGNON CONTREMARCHE
50	175786	BIC.HEX SCREW DIN933-8.M16X40	TOR.EX.DIN933-8.8 B.TRI.M16X40	VIS HEX.DIN933-8,8 BICR M16X40
51	200626	WASHER 50X17X9	ARANDELA 50X17X9 TRIVALEN.	RONDELLE 50X17X9
52	167403	1M.SIMPLE CHAIN 1/2"X5/16" (1 METER)	1M.CADENA SIMPLE 1/2"X5/16" (1 METRO)	1M.CHAÎNE SIMPLE 1/2"X5/16" (1 METRE)
	105031	STRAIGHT CHAIN COUPLING 1/2"	ENGANCHE CADENA RECTO,1/2"	UNION CHAINE DROIT 1/2"
53	269233	CLOTH INLET ROLL SHAFT	MUÑON RODILLO ENTRADA ROPA	AXE ROULEAU ENTREE LINGE
54	146399	BICR HEX SCREW DIN933-8 M8X20	TOR.EX.DIN933-8.8 B.TRI.M 8X20	VIS HEX DIN933-8.8 BICR.M8X20
55	303230	FOLDER TAPE	CINTA PLEGADOR	RUBAN PLIEUSE
56	301598	PIN DIN 6885-A 20X 5X 5	CHAVETA DIN 6885-A 20X 5X5	CLAVETTE DIN 6885-A 20X 5X 5
57	127670	PIN DIN 6885-A 25X 8X 7	CHAVETA DIN 6885-A 25X 8X7	CLAVETTE DIN 6885-A 25X 8X 7

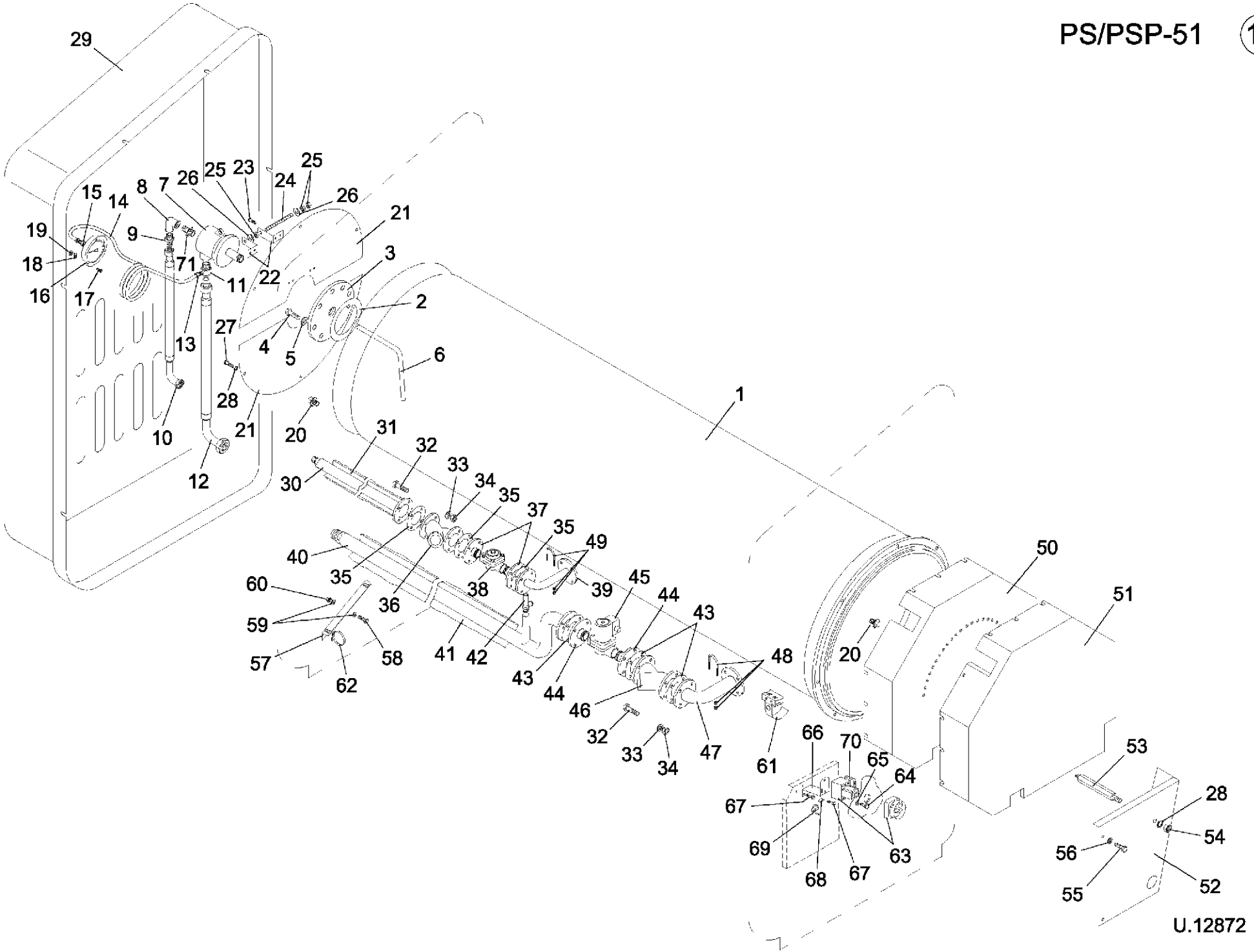
29
15
14
8
7
26
25
23
24
25
26
21
19
9
18
71
22
3
16
17
11
2
13
27
4
5
6
28
1
10
21
20
31
32
12
30
33
34
35
37
35
49
40
35
36
38
39
45
44
43
50
51
60
59
57
58
41
42
43
44
48
20
62
46
32
33
34
47
61
66
70
65
64
53
67
28
69
63
54
56
68
67
55
52
U.12872

Nº	REF	DENOMINATION	DENOMINACIÓN	DENOMINATION
1	289637	CYLINDER SET (FOR 5119)	CONJUNTO CILINDRO (PARA 5119)	ENSEMBLE CYLINDRE (POUR 5119)
	289629	CYLINDER SET (FOR 5132)	CONJUNTO CILINDRO (PARA 5132)	ENSEMBLE CYLINDRE (POUR 5132)
2	151241	INOX SPIROMETALLIC GASKET 3"	JUNTA SPIROMETAL.INOX 3" *	JOINT SPIROMETALLIQUE INOX 3"
3	289033	ROTARY GASKET CLAMP	BRIDA JUNTA ROTATIVA	BRIDE JOINT TOTATIVE
4	147181	HEX SCREW 8G DIN933 M 16X45	TOR.EX.DIN933-8.8 B.TRI.M16X45	VIS HEX. 8G DIN933 M 16X45
5	149385	BICR.WASHER B DIN125-ST 17	ARAN.B DIN125-ST B.TRI.17	RONDELLE B DIN125-ST BICR.17
6	289041	SIPHON HOSE	TUBO SIFON	TUBE SIPHON
7	306100	ROTARY GASKET	JUNTA ROTATIV.9100-008-113 1"*	JOINT ROTATIVE
8	129486	FIG.90 1-3/4" GALV.	FIGURA 90RED.1-3/4" GALV.	FIG.90 1-3/4" GALV.
9	176180	11003 JOINTING SCREW .1/2-3/4	11003 TORN.UNION RED.M1/2-M3/4	11003 VIS UNION REDUC 1/2-3/4
10	305961	CONDENSATE FLEXIBLE HOSE	TUBO FLEXIBLE CONDENSADOS	TUBE FLEXIBBLE CONDENSATS
11	288993	JOINTING SCREW	TORNILLO UNION	VIS UNION
12	305953	STEAM FLEXIBLE HOSE	TUBO FLEXIBLE VAPOR	TUBE FLEXIBLE VAPEUR
13	178558	SIMPLE JOINTING 1/4" 431250628	CONEXION RECTA 1/4" 431250628	UNION SIMPLE 1/4" 431250628
14	128157	COPPER HOSE D6X4 (1 METER)	TUBO COBRE RECOCIDO D6X4 (1 METRO)	TUBE CUIVRE D6X4 (1 METRE)
15	178541	SIMPLE JOINTING 1/4"RE.1140613	UNION SIMPLE 1/4" REF.1140613	UNION SIMPLE 1/4" REF.1140613
16	178491	WIKA MANOMETER 0-16 KG/CM2	MANOMETRO WIKA 0-16 KG/CM2 *	MANOMETRE WIKA 0-16 KG/CM2
17	144758	INOX LENS HEAD S.DIN963 M 3X16	TOR.AV.DIN963 INOX A2-70 M3X16	VIS T/FRAI.INOX DIN963 M 3X16
18	219758	INOX WASHER 12X4X1,5	ARANDELA 12X4X1.5 INOX	RONDELLE 12X4X1,5 INOX
19	149906	INOX. HEX. NUT DIN 934 M-3	TUER.EX.DIN934 INOX A2-70 M 3	ECROU HEX. INOX DIN934 M-3
20	122291	FIG. 290 1/4" GALV.	FIGURA 290 DE 1/4" GALV.	FIG. 290 1/4" GALV.
21	289199	ROLL LEFT COVER	TAPA IZQUIERDA RODILLO	COUVERCLE GAUCHE ROULEAU
22	270058	END PIECE	PIEZA TOPE	PIECE ARRET
23	166645	CYL.PLATE SCREW DIN7971 8X5/8"	TOR.CHAPA CILI.DIN7971 8X5/8"	VIS PLAQUE CIL.DIN7971 8X5/8"
24	267955	END PIN	PASADOR TOPE	GOUJON ARRET
25	149963	INOX HEX NUT DIN 934 M-8	TUER.EX.DIN934 INOX A2-70 M 8	ECROU HEX. INOX DIN 934 M-8
26	149351	INOX A2 WASHER DIN 125 8,4	ARAN. DIN125 INOX A2 8,4	RONDELLE INOX A2 DIN 125 8,4

Nº	REF	DENOMINATION	DENOMINACIÓN	DENOMINATION
27	146373	BICR.HEX SCREW DIN933-8 M 8X10	TOR.EX.DIN933-8.8 B.TRI.M 8X10	VIS HEX BICR.DIN933-8.8 M 8X10
28	149708	BICR.EXT.TOOT.WASH.DIN6798 M8	ARAN.DEN.EXT.B.TRI.DIN6798M 8	RONDEL.DEN.EX.BICR.DIN6798 M8
29	289496	LEFT SIDE PANEL	TAPA LATERAL IZQUIERDA(319186)	COUVERCLE LATERAL GAUCHE
30	289132	VAPOUR STRAIGHT PIECE	TRAMO RECTO CONDENSADOS	PIECE DROIT CONDENSATS
31	181123	ISOLATOR 1/2"X25 L1.20	CUBRETUBERIAS 1/2"X25 L.1,20	ISOLANT 1/2"X25 L1,20
32	145524	HEX SCREW 8G DIN931 M12X55	TOR.EX.DIN931-8.8 B.TRI.M12X55	VIS HEX 8G DIN931 M12X55
33	149419	BICR.WASHER B DIN125-ST 13	ARAN.B DIN125-ST B.TRI.13	RONDELLE B DIN125-ST BICR.13
34	150235	BICR.HEX NUT DIN 934-8 M-12	TUER.EX.DIN934-8 B.TRI.M12	ECROU HEX DIN 934-8 BICR.M-12
35	133835	INOX SPIROMETALLIC GASKET 3/4"	JUNTA SPIROMETAL.INOX 3/4" *	JOINT SPIROMETAL INOX 3/4"
36	178574	FILTER WITH CLAMP 3/4"PN16	FILTRO TIPO Y C/B 3/4"T.0,1*	FILTRE AVEC BRIDE 3/4"PN16
	317420	FILTER MESH Y C/B 3/4" 0,1	MALLA FILTRO Y C/B 3/4" 0,1*	TAMIS FILTRE Y C/B 3/4" 0,1
37	247684	CONDENSATE OUTLET COUPLING	ACOPLAMIENTO SALIDA CONDENSAD.	UNION SORTIE CONDENSATS
38	306118	STEAM TRAP TLV MOD. J3X 3/4"	PURGADOR TLV MODELO J3X 3/4"	PURGEUR TLV MOD.J3X 3/4"
	315291	THREADED FILTER J3X-13 DN 3/4"	FILTRO PURGADOR J3X-13 DN 3/4"	FILTRE FILETE J3X-13 DN 3/4"
39	289165	VAPOUR STRAIGHT PIECE	TRAMO CURVADO CONDENSADOS	PIECE DROIT CONDENSATS
40	288985	VAPOUR STRAIGHT PIECE	TRAMO RECTO VAPOR	PIECE DROIT CONDENSATS
41	181115	ISOLATOR 1" X25 L1.20	CUBRETUBERIAS 1" X25 L.1,20	ISOLANT 1" X25 L1,20
42	195503	SAFETY VALVE 1/2	VALV.SEGURIDAD VYC 695 AS 1/2*	VANNE SECURITE 1/2
43	133843	INOX SPIROMETALLIC GASKET 1"	JUNTA SPIROMETAL.INOX 1" *	JOINT SPIROMETALLIQUE INOX 1"
44	285486	STEAM COUPLING	ACOPLAMIENTO VAPOR	ASSAMBLAGE VAPEUR
45	164129	ELECTROV.032U3053 3/4" 220/50 (FOR 50 HZ)	ELECT.032U3053/84 3/4" 220/50 (PARA 50 HZ)	ELECTROV.032U3053.3/4" 220/50 (POUR 50 HZ)
	159806	COIL 32K7771 220/50 (FOR 50 HZ)	BOBINA DANFOSS 32K7771 220/50 (PARA 50 HZ)	BOBINE 32K7771 220/50 (POUR 50 HZ)
	159822	SPARE KIT EVJHS-15-20	KIT REPUES.EVJHS-15-20 32U3129	KIT RECHANGE EVJHS-15-20
	100511	ELECTROV.032U3053 3/4" 220/60 (FOR 60 HZ)	ELECT.032U3053/90 3/4" 220/60 (PARA 60 HZ)	ELECTROV.032U3053 3/4" 220/60 (POUR 60 HZ)
	159814	COIL 32K7776 220/60 (FOR 60 HZ)	BOBINA DANFOSS 32K7776 220/60 (PARA 60 HZ)	BOBINE 32K7776 220/60 (POUR 60 HZ)
	159822	SPARE KIT EVJHS-15-20	KIT REPUES.EVJHS-15-20 32U3129	KIT RECHANGE EVJHS-15-20

Nº	REF	DENOMINATION	DENOMINACIÓN	DENOMINATION
46	133660	FILTER TYPE Y C/B 1" T.0,1	FILTRO TIPO Y C/B 1" T.0,1*	FILTRE TYPE Y C/B 1" T.0,1
	317438	FILTER MESH Y C/B 1" 0,1	MALLA FILTRO Y C/B 1" 0,1*	TAMIS FLITRE Y C/B 1" 0,1
47	277798	STEAM ELBOW PIECE	TRAMO CURVADO VAPOR	PIECE COUDE VAPEUR
48	306092	CLAMP FIG.940 TYPE U 1"	ABRAZAD.FIG.940,FORMA U 1"	BRIDE FIG.940 TIPE.U 1"
49	306126	CLAMP FIG.940 TYPE U 3/4"	ABRAZAD.FIG.940,FORMA U 3/4"	BRIDE FIG.940 TIPE U 3/4"
50	270991	ROLL RIGHT COVER	TAPA DERECHA RODILLO	COUVERCLE DROITE ROULEAU
51	291328	RIGHT PANEL ISOLATION	AISLANTE TAPA DERECHA	ISOLANT COUVERCLE DROITE
52	289215	CHAIN PROTECRTION COVER	TAPA PROTECCION CADENAS	COUVERCLE PROTECTION CHAIN
53	289181	PROTECTION COVER BOLT	PERNO TAPA PROTECCION	GOUJON COUVERCLE PROTECTION
54	150201	BICR.HEX NUT DIN 934-8 M-8	TUER.EX.DIN934-8 B.TRI.M 8	ECROU HEX.DIN 934-8 BICR.M-8
55	165621	BIC HEX SCREW DIN933-8,8 M6X10	TOR.EX.DIN933-8.8 B.TRI.M 6X10	VIS HEX DIN933-8,8 BICR M6X10
56	149526	BICR.WASHER B DIN125-ST 6,4	ARAN.B DIN125-ST B.TRI. 6,4	RONDELLE B DIN125-ST BICR.6,4
57	289223	INSTALLATION BRACKET	SOPORTE INSTALACION	SUPPORT INSTALLATION
58	146233	BICR.HEX SCREW DIN933-8 M6X15	TOR.EX.DIN933-8.8 B.TRI.M 6X15	VIS HEX DIN933-8.8 BICR.M6X15
59	149526	BICR.WASHER B DIN125-ST 6,4	ARAN.B DIN125-ST B.TRI. 6,4	RONDELLE B DIN125-ST BICR.6,4
60	150227	BICR HEX NUT DIN934-8 M6	TUER.EX.DIN934-8 B.TRI.M 6	ECROU HEX DIN934-8 BICR.M6
61	198556	QUICK FIXING CLIP	CLIP FIJACION RAPIDA 101-231	CLIP FIXATION RAPIDE
62	140525	CLAMP 2244-0	BRIDA UNEX 2244-0 *	BRIDE 2244-0
63	198861	GRAL.SWITCH P1-25/V/SVB	INTERRUPT.GENERAL P1-25/V/SVB	INTERRUPTEUR GRAL.P1-25/V/SVB
64	146084	BICR CYL SCREW DIN84 M 4X 10	TOR.CIL.DIN84-4.8 B.TRI.M 4X10	VIS CYL BICR DIN84-4.8 M 4X 10
65	149476	BICR.WASHER B DIN125-ST 4,3	ARAN.B DIN125-ST B.TRI. 4,3	RONDELLE B DIN125-ST BICR.4,3
66	274522	DISCONNECTOR BRACKET	SOPORTE SECCIONADOR	SUPPORT SECTIONNEUR
67	183400	CYL.PLATE SCREW ST-4 20 C/AL	TOR.CHAPA ST-4 20 C/AL.T25	VIS PLAQUE CYL.ST-4 20 C/AL
68	199281	CLAMP BRACKET TA2-C	SOPORTE BRIDA TA2-C	SUPPORT BRIDE TA2-C
69	199299	CLAMP PRT1.5S-C	BRIDA RECUPERABLE PRT1.5S-C	BRIDE PRT1.5S-C
70	198879	SECTION.NEUTRE N-P1Z (FOR 380 AND 415V)	NEUTRO SECCIONABLE N-P1Z (PARA 380 Y 415V)	NEUTRE SECCON.N-P1Z (POUR 380 ET 415V)
71	292565	MALE DOUBLE JOINTING 1"	UNION DOBLE MACHO 1"	UNION DOUBLE MALE 1"

Nº	REF	DENOMINATION	DENOMINACIÓN	DENOMINATION
		FROM MACHINE Nr:	A PARTIR DE LA MAQUINA No :	A PARTIR DE LA MACHINE NR:
		615.033 620.331 625.233 630.455	615.033 620.331 625.233 630.455	615.033 620.331 625.233 630.455
29	319186	LEFT SIDE PANEL	TAPA LATERAL IZQUIERDA	COUVERCLE LATERAL GAUCHE

Nº	REF	DENOMINATION	DENOMINACIÓN	DENOMINATION
		FROM MACHINE Nr:	A PARTIR DE LA MAQUINA No :	A PARTIR DE LA MACHINE NR:
		620.518 630.773	620.518 630.773	620.518 630.773
1	327767	CYLINDER SET (FOR 5119)	CILINDRO CENTRAL (PARA 5119)	ENSEMBLE CYLINDRE (POUR 5119)
	327759	CYLINDER SET (FOR 5132)	CILINDRO CENTRAL (PARA 5132)	ENSEMBLE CYLINDRE (POUR 5132)

Nº	REF	DENOMINATION	DENOMINACIÓN	DENOMINATION
		FROM MACHINE Nr: 615.081 620.905 625.681 631.528	A PARTIR DE LA MAQUINA No : 615.081 620.905 625.681 631.528	A PARTIR DE LA MACHINE NR: 615.081 620.905 625.681 631.528
29	514539	LEFT SIDE PANEL (WHITE PAINTED)	TAPA LATERAL IZQUIERDA (PINTADA BLANCA)	COUVERCLE LATERAL GAUCHE (PEINTE BLANCHE)

ACJ SYSTEMS, S.L. es una empresa joven, din□ni ca y en proceso de expansi□, c reada en el a□ 2000 y dedi cada al mundo de la lavandería industrial, con el objetivo de convertirse en un fiel proveedor del profesional que d□ t ras d□ e st□r abajando en este sector.

La clave de nuestro □xito consiste en apostar por la calidad, la innovaci□, la agilidad en las e ntregas y en ofrecer soluciones a nuestros clientes.

Compra-venta de m□quinas de l avander□ de segunda mano: en nuestras instalaciones las reparamos y acondicionamos para ser vendidas en perfectas condiciones y hacemos la puesta en marcha en casa del cliente.
Reparaci□ de m□quinas, ya sea en nuestras instalaciones o en las de nuestros clientes.
Suministro de materiales y piezas de recambio para cualquier m□quina de l avander□ indu strial.
Mantenimiento de lavander□s.

www.acjsystems.com

ACJ SYSTEMS, S.L. | C.Osona,10 Tona-Barcelona 08551 | T.+34 93 812 49 41 | acj@acjsystems.com